Product datasheet

Specifications



inductive sensor XS1 M12 - L55mm - brass - Sn2mm - 12..24VDC - M12

XS112BLPBM12

Main

Range of product	Telemecanique Inductive proximity sensors XS
Series name	General purpose
Sensor type	Inductive proximity sensor
Sensor name	XS1
Sensor design	Cylindrical M12
Size	55 mm
Body type	Fixed
Enclosure material	Nickel plated brass
Type of output signal	Discrete
Wiring technique	3-wire
[Sn] nominal sensing distance	2 mm
Discrete output function	1 NC
Discrete output type	PNP
Electrical connection	Male connector M12, 4 pins
[Us] rated supply voltage	12...24 V DC with reverse polarity protection
Switching capacity in mA	<= 200 mA with overload and short-circuit protection
IP degree of protection	IP67 conforming to IEC 60529

Complementary

ISO thread	M12 x 1
Detection face	Frontal
Detector flush mounting acceptance	Flush mountable
Material	Metal
Front material	PBT
Operating zone	0…1.6 mm
Differential travel	1...15% of Sr
Output circuit type	DC
Status LED	Output state: 1 LED (yellow)

Disclaimer: This documentation is not intended as a substitute for and is not to be used for determining suitability or reliability of these products for specific user applications

Supply voltage limits	10…36 V DC
Switching frequency	<= 2500 Hz
Maximum voltage drop	<2 V (closed)
Current consumption	<= 10 mA no-load
Maximum delay first up	15 ms
Maximum delay response	0.1 ms
Maximum delay recovery	0.15 ms
Marking	CE
Threaded length	34 mm
Length	55 mm
Net weight	0.015 kg

Environment

Product certifications	UL CSA
Ambient air temperature for operation	-25…70 °C
Ambient air temperature for storage	-40…85 °C
Vibration resistance	25 gn amplitude = +/- 2 mm (f = 10…55 Hz) conforming to IEC 60068-2-6
Shock resistance	50 gn for 11 ms conforming to IEC 60068-2-27

Packing Units

Unit Type of Package 1	PCE
Number of Units in Package 1	1
Package 1 Weight	40.0 g
Package 1 Height	4.2 cm
Package 1 width	6.5 cm
Package 1 Length	9.6 cm
Unit Type of Package 2	S02
Number of Units in Package 2	44
Package 2 Weight	2.215 kg
Package 2 Height	15 cm
Package 2 width	30 cm
Package 2 Length	40 cm

Offer Sustainability

Sustainable offer status	Green Premium product
REACh Regulation	REACh Declaration
EU RoHS Directive	Pro-active compliance (Product out of EU RoHS legal scope) EU RoHS Declaration
Mercury free	Yes
RoHS exemption information	Yes
Environmental Disclosure	Product Environmental Profile
Circularity Profile	End of Life Information

Contractual warranty

Warranty	18 months

Product datasheet XS112BLPBM12

Dimensions Drawings

Dimensions

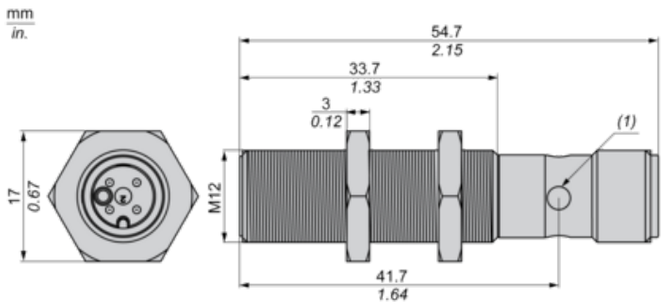

(1) LED

Minimum Mounting Distances

Side by side

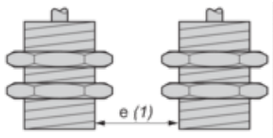

e (1) ≥ 4 mm/0.16 in.

Face to face

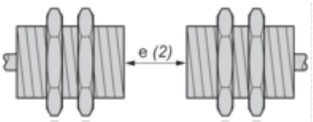

e (2) ≥ 24 mm/0.94 in.

Facing a metal object

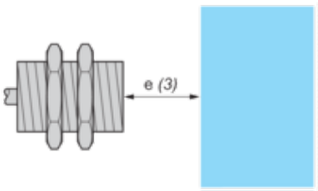

e (3) ≥ 6 mm/0.24 in.

Wiring Schemes

M12 connector



PNP

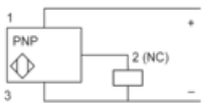

1 : (+)
2 : NC Output
3 : (-)
4 : Not connected

Performance Curves

Standard Steel Target : 12x12x1 mm

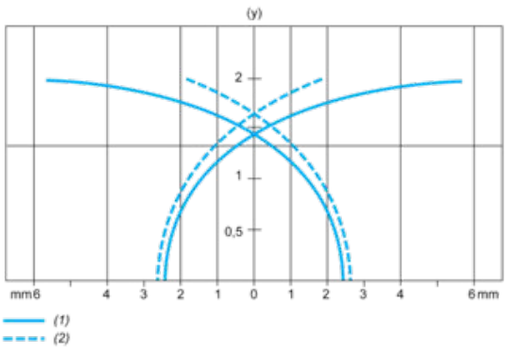

(1) Pick-up points

(2) Drop-out points (object approaching from the side)

(y) Sensing distance in mm