MX5004

Speed sensor

MXD41,7 ANOG/H/AMP

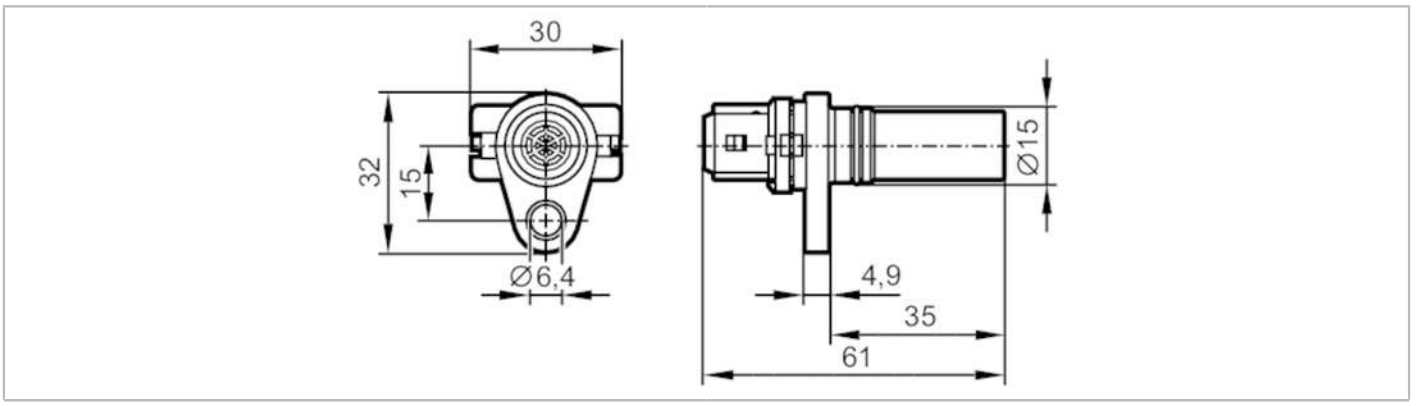

Product characteristics		
Electrical design		NPN
Sensing range	[mm]	1.7; (Using toothed wheels with a different modulus has an influence on the sensing range and the phase position.)
Dimensions	[mm]	Ø 15 / L = 61
Electrical data		
Operating voltage	[V]	7...30 DC
Current consumption	[mA]	< 30
Protection class		III
Reverse polarity protection		no
Outputs		
Electrical design		NPN
Permanent current rating of switching output DC	[mA]	50
Switching frequency DC	[Hz]	1...15000
Short-circuit protection		no
Detection zone		
Sensing range	[mm]	1.7; (Using toothed wheels with a different modulus has an influence on the sensing range and the phase position.)
Operating distance	[mm]	1
Operating conditions		
Ambient temperature	[°C]	-32...140
Ambient temperature	[°C]	125
Note on ambient temperature		for the plug area
Protection		IP 67; IP 69K; (plug: IP 54)
Tests / approvals		
EMC	EN 61000-4-2	4 kV CD / 8 kV AD
	EN 61000-4-3 HF radiated	10 V/m
	EN 61000-4-4 Burst	2 kV
	EN 61000-4-6 HF conducted	10 V
	EN 61000-4-8	30 A/m
Shock resistance	DIN EN 60068-2-27	30 g 11 ms half-sine; 3 shocks each in every direction of the 3 coordinate axes

MX5004

Speed sensor

MXD41,7 ANOG/H/AMP

Salt spray test		EN 60068/2-11	96 h 5 % NaCl bei 25 °C
MTTF	[years]	5006	

Mechanical data

Weight	[g]	25
Dimensions	[mm]	Ø 15 / L = 61
Materials		socket: brass; housing: PA; O-ring: FKM
Tightening torque	[Nm]	7
Toothed wheel module	[mm]	1.25
Installation length	[mm]	35

Remarks

Pack quantity	1 pcs.

Electrical connection

Connection

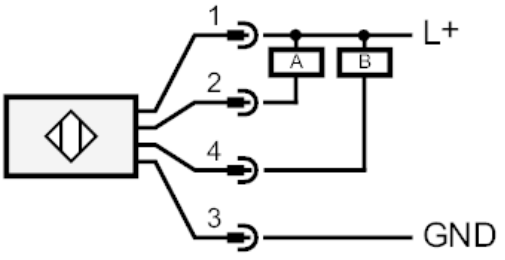

A: Pulse output
B: Pulse output

Connector: 1 x AMP-Junior Timer (282 192-1)

Diagrams and graphs

switching signals

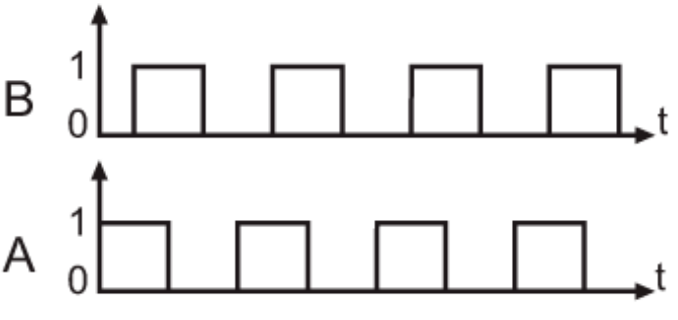

phase shift 90° +/- 20°

pulse/pause ratio 50 % +/- 10 %

Using toothed wheels with a different modulus has an influence on the sensing range and the phase position.