Brand of NTN corporation

Technical data

ESFL206

Bearing units



Grey cast housing, radial insert ball bearing with eccentric locking collar, single lip seal

KIT CONTENT

ES206G2, FL206

VISUAL (S)

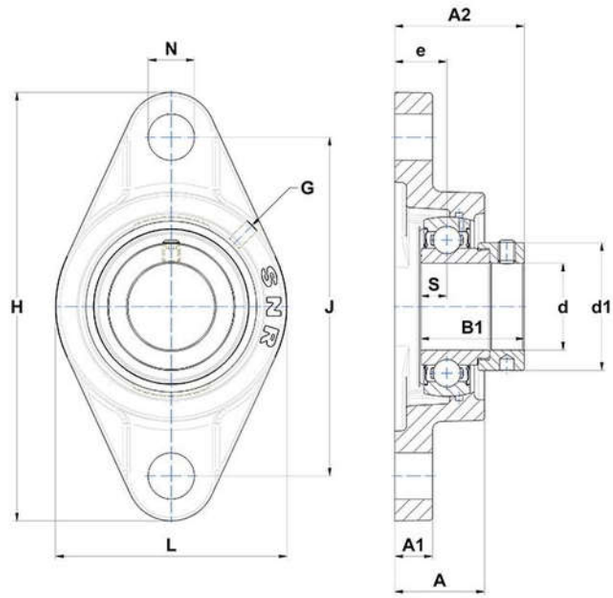

PRODUCT DEFINITION

Brand	SNR
A - Housing height	31 mm
A1 - Housing foot height / flange height	13 mm
A2 - Total height from mounting surface	44,7 mm
B - Width of Inner Ring	23,8 mm
B1 - Overall width Inner Ring	35,7 mm

NTN Europe
1 rue des Usines · BP 2017 · 74010 Annecy Cedex · France · Tel. +33 (0)4 50 65 30 00
S.A. au capital de 322 639 919 € · RCS ANNECY B 325 821 072 · Id. Fiscale : FR 48 325 821 072
SIRET 325 821 072 00015 · Code APE 2815 Z · Code NACE 28.15

PRODUCT DEFINITION	
d - Shaft diameter	30 mm
d1 - Outer dia of eccent. Lock. collar / nut of adapter sleeve	44,1 mm
e - Distance mounting surface to bearing center	18 mm
G - Grease fitting	M6x1
H - Housing length, width or diameter	148 mm
J - Mounting holes distance	117 mm
L - Housing width / diameter	80 mm
N - Mounting hole dimension	16 mm
S - Distance front side/bearing centre	9 mm

PRODUCT PERFORMANCE	
C - Dynamic load rating	19500000 mN
C0 - Static load rating	11200000 mN
Operating temperature min.	253,15 °K
Operating temperature max.	373,15 °K

OTHER FEATURES	
Mass	0,9 kg
Recommended tightening torque for set screw	11.5 N-m