Series QR2-S-RPN standard

2024-04-10

1823373048

AVENTICS Series QR2 Fittings

AVENTICS Series QR2,push-in connectors with easy, secure mounting are available in many versions: In metal for tubing diameters from 3 to 16 mm. QR2 Series offers a cylindric thread that allows repeated connection and release without problems (Quick Release) and captive O-ring guarantees an optimal sealing. Our QR program offers the right solution for every application and industry.



Technical data

Industry	Industrial
Fitting type	Straight fitting
Compressed air connection type	External thread
Port G	G 1/4
Compressed air connection type 2	push-in fitting
Port D	Ø 8
Type	QR2-S-RPN
Min. working pressure	-0.95 bar
Max. working pressure	16 bar
Min. ambient temperature	-20 °C
Max. ambient temperature	80 °C
Delivery unit	10 piece
Weight	0.016 kg

Material

Housing material	Brass
Surface housing	nickel-plated
Seal material	Acrylonitrile butadiene rubber
Material tooth lock washer	Stainless Steel

Material release ring	Brass
Surface release ring	nickel-plated
Material thread	Brass
Surface thread	nickel-plated
Part No.	1823373048

Technical information

The series QR1 (plastic) and QR2 (metal) can not be combined

Thread seal with captive O-ring

Dimensions

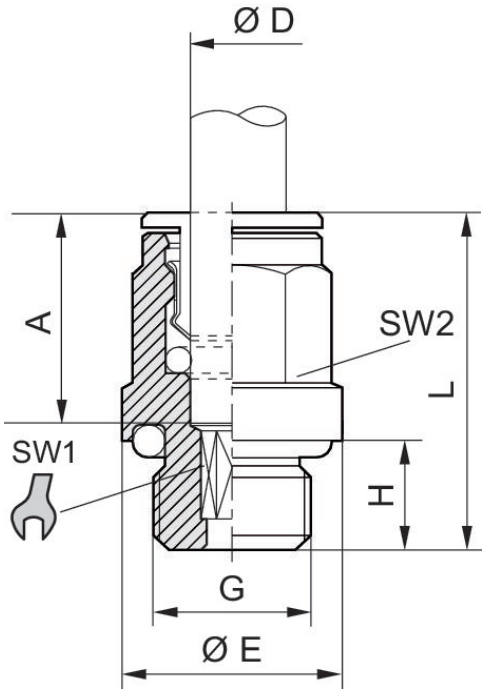

Fig. 2

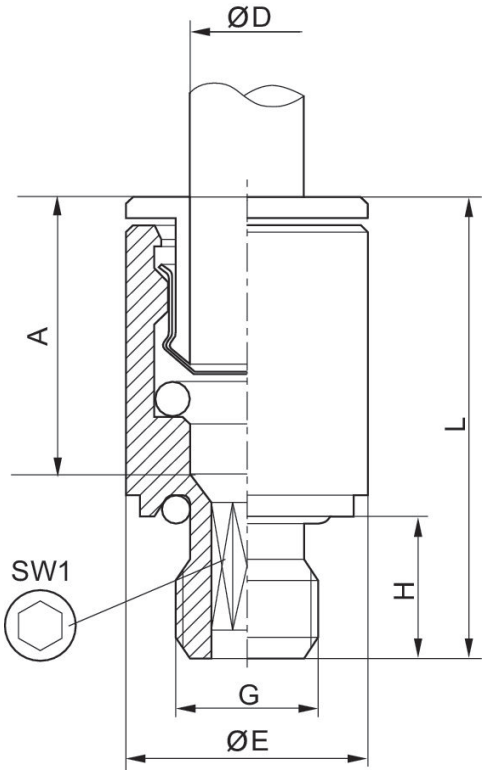

Part No.	Port D	Port G	Ø E	H	L	A Inser-tion depth	SW 1	SW 2	Fig.
1823373038	Ø 4	M5	9	4	20.5	15	2.5	–	Fig. 1
1823373039	Ø 5	M5	9.5	4	22	16	2.5	–	Fig. 1
1823373040	Ø 6	M5	10.5	4	22	16	2.5	–	Fig. 1
1823373100	Ø 4	M7	10.8	6	22	15	2.5	9	Fig. 1
1823373088	Ø 6	M7	10.5	6	24	16	3.5	–	Fig. 1
1823373041	Ø 4	G 1/8	13.5	6	20	15	2.5	9	Fig. 1
1823373042	Ø 5	G 1/8	13.5	6	22	16	4	10	Fig. 1
1823373043	Ø 6	G 1/8	13.5	6	24	16	4	11	Fig. 1
1823373044	Ø 8	G 1/8	13	6	26.5	18	5	13	Fig. 1
1823373045	Ø 4	G 1/4	17	8	21	15	2.5	9	Fig. 1
1823373046	Ø 5	G 1/4	17	8	22	16	4	10	Fig. 1
1823373047	Ø 6	G 1/4	17	6.5	22.5	16	4	11	Fig. 1
1823373048	Ø 8	G 1/4	17	8	25	18	6	13	Fig. 1
1823373049	Ø 10	G 1/4	16	8	29.5	19	7	16	Fig. 1
1823391809	Ø 12	G 1/4	16	6.5	30	20	7	18	Fig. 1
R412004708	Ø 12	G 1/4	17	8.3	31		7	–	Fig. 1
1823373050	Ø 8	G 3/8	20	9	25	18	6	13	Fig. 1
1823373051	Ø 10	G 3/8	21	9	29.5	19	8	16	Fig. 1
1823373052	Ø 12	G 3/8	21	9	31	20	10	18	Fig. 1
1823373053	Ø 14	G 3/8	21	9	34	22	10	21	Fig. 1
1823373054	Ø 12	G 1/2	24	11	31	20	10	18	Fig. 1
1823373055	Ø 14	G 1/2	24	11	34	22	12	21	Fig. 1

Part No.	Port D	Port G	Ø E	H	L	A Inser-tion depth	SW 1	SW 2	Fig.
R412007955	Ø16	G 1/2	24	11	37		12	24	Fig. 1