8BVR0880H000.100-2

1 General information

- Connection for temperature sensor
- Optimally suited for ACOPOSmulti 8BVP power supply modules

2 Order data

Model number	Short description	Figure
	Regeneration chokes	
8BVR0880H000.100-2	ACOPOSmulti regeneration choke, 90 A, 480 V, terminal blocks	

Table 1: 8BVR0880H000.100-2 - Order data

3 Technical data

Model number	8BVR0880H000.100-2
General information	
Cooling and mounting method [1]	Wall mounting
Certifications	
CE	Yes
UL	cULus E225616 Power conversion equipment
Mains connection	
Mains input voltage	3x 220 to 3x 480 VAC ±10%
Frequency	50 / 60 Hz ±4%
Allocation to power supply module	8BVP0880HC00.00x-1 8BVP0880HW00.00x-1
Continuous current [2]	90 A_{eff}
Peak current <10 s	180 A_{eff}
Reduction of continuous current depending on ambient temperature	
Horizontal mounting orientation	In preparation
Vertical mounting orientation	In preparation
Reduction of continuous current depending on installation elevation	
Starting at 1000 m above sea level	7.2 A_{eff} per 1,000 m
Power dissipation at nominal current	391 W
Design	
U1, V1, W1	Terminals
U2, V2, W2	Terminals
Shield connection [3]	
On mains	No
On device	No

Table 2: 8BVR0880H000.100-2 - Technical data

Model number	8BVR0880H000.100-2
Terminal connection cross section	
Solid core / Multiple-conductor lines	2.5 to 50 mm²
Flexible and fine wire lines	
With wire end sleeves	2.5 to 35 mm²
Approbation data	
UL/C-UL-US	12 to 1 AWG
CSA	12 to 2 AWG
Inductance	0.5 mH
Temperature sensor connection	
Design	
T+, T-	Terminals
Terminal connection cross section	
Flexible and fine wire lines	
With wire end sleeves	0.5 to 2.5 mm²
Approbation data	
UL/C-UL-US	30 to 12 AWG
CSA	26 to 12 AWG
Operating conditions	
Permissible mounting orientations	
Hanging vertically	No
Lying horizontally	Yes
Standing horizontally	Yes
Installation at elevations above sea level	
Nominal	0 to 500 m
Maximum [4]	4000 m
Pollution degree per EN 61800-5-1	2 (non-conductive pollution)
Overvoltage category per EN 61800-5-1	III
Degree of protection per EN 60529	IP20
Environmental conditions	
Temperature	
Operation	
Nominal	5 to 40°C
Maximum [5]	55°C
Storage	-25 to 55°C
Transport	-25 to 70°C
Relative humidity	
Operation	5 to 85%
Storage	5 to 95%
Transport	Max. 95% at 40°C
Mechanical characteristics	
Dimensions	
Width	289 mm
Height	412 mm
Depth	157 mm
Weight	32.7 kg

Table 2: 8BVR0880H000.100-2 - Technical data

1) The C-UL-US listing is only valid for the mounting orientation "lying horizontally".
2) Valid under the following conditions: mounting orientation "standing horizontally", 40°C ambient temperature, installation elevation <500 m above sea level.
3) Cables do not have to be shielded up to a total length of 3 m between the line filter, regeneration choke and power supply module. Please contact B&R when using cable lengths >3 m.
4) Continuous operation at an installation elevation of 500 m to 4,000 m above sea level is possible taking the specified reduction of continuous current into account. Requirements that go beyond this must be arranged with B&R.
5) Continuous operation at an ambient temperature of 40°C to max. 55°C is possible taking the specified reduction of continuous torque into account, but this results in premature aging.

4 Dimension diagram and installation dimensions

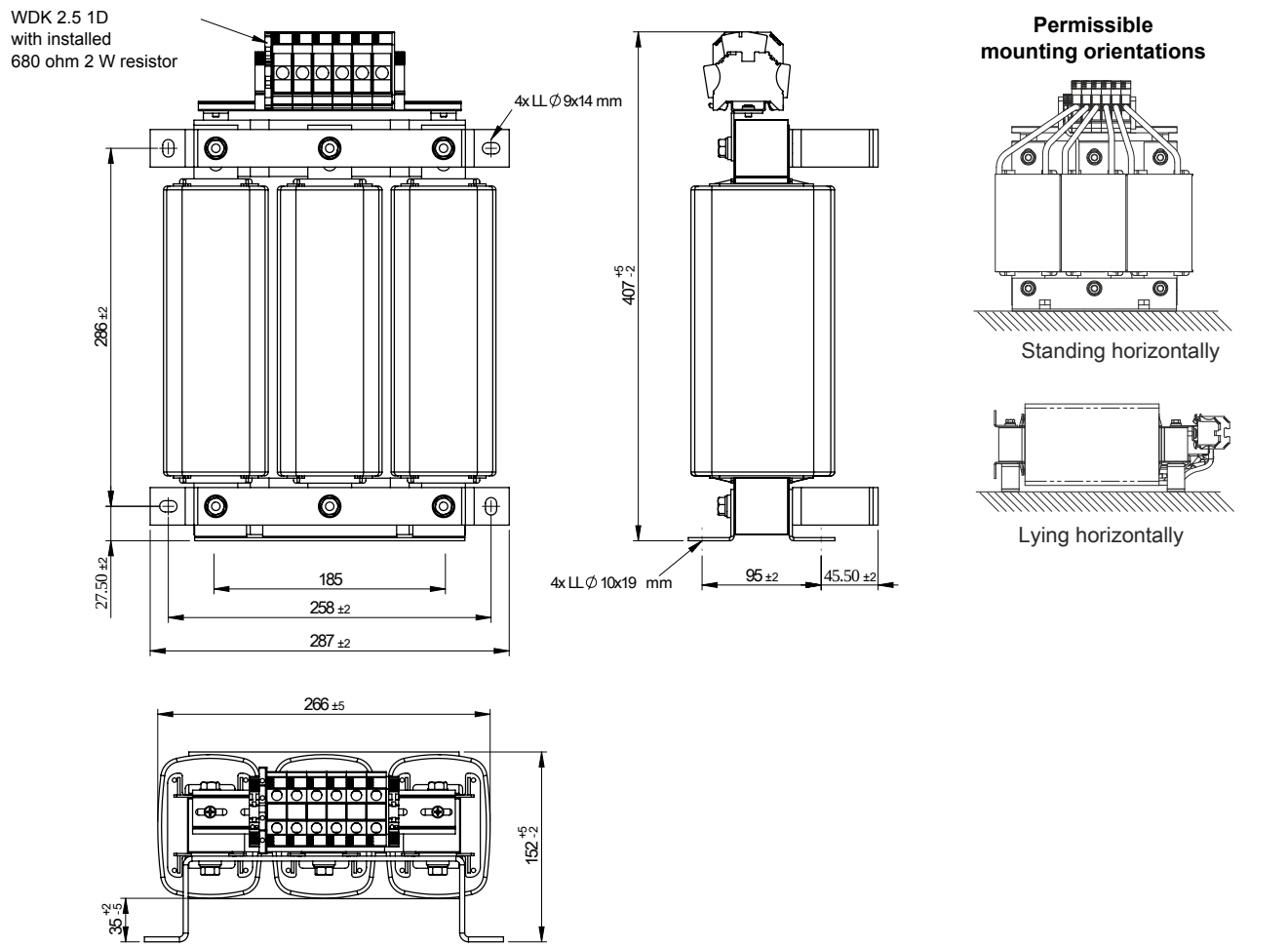

Figure 1: Dimension diagram and installation dimensions

Warning!

When installing ACOPOSmulti regeneration chokes make sure that the windings and connection wires are strongly insulated from the neighboring electrically conductive components (e.g. control cabinet wall).

If this reinforced insulation is implemented solely through the use of an air gap, a minimum distance to adjacent conductive parts of 8 mm (or 12.7 mm per cULus) is required.

Caution!

Depending on the mounting orientation, the warning labels on the regeneration choke may not be clearly visible. Therefore, two additional warning labels are included in the delivery for the user to place in a clearly visible location on the regeneration choke. These warning labels are attached to the regeneration choke by a cable tie and must be removed before initial startup because the backing film for the warning label is not sufficiently heat-resistant!

5 Wiring

5.1 8BVR0880H000.100-2 - Pinout overview

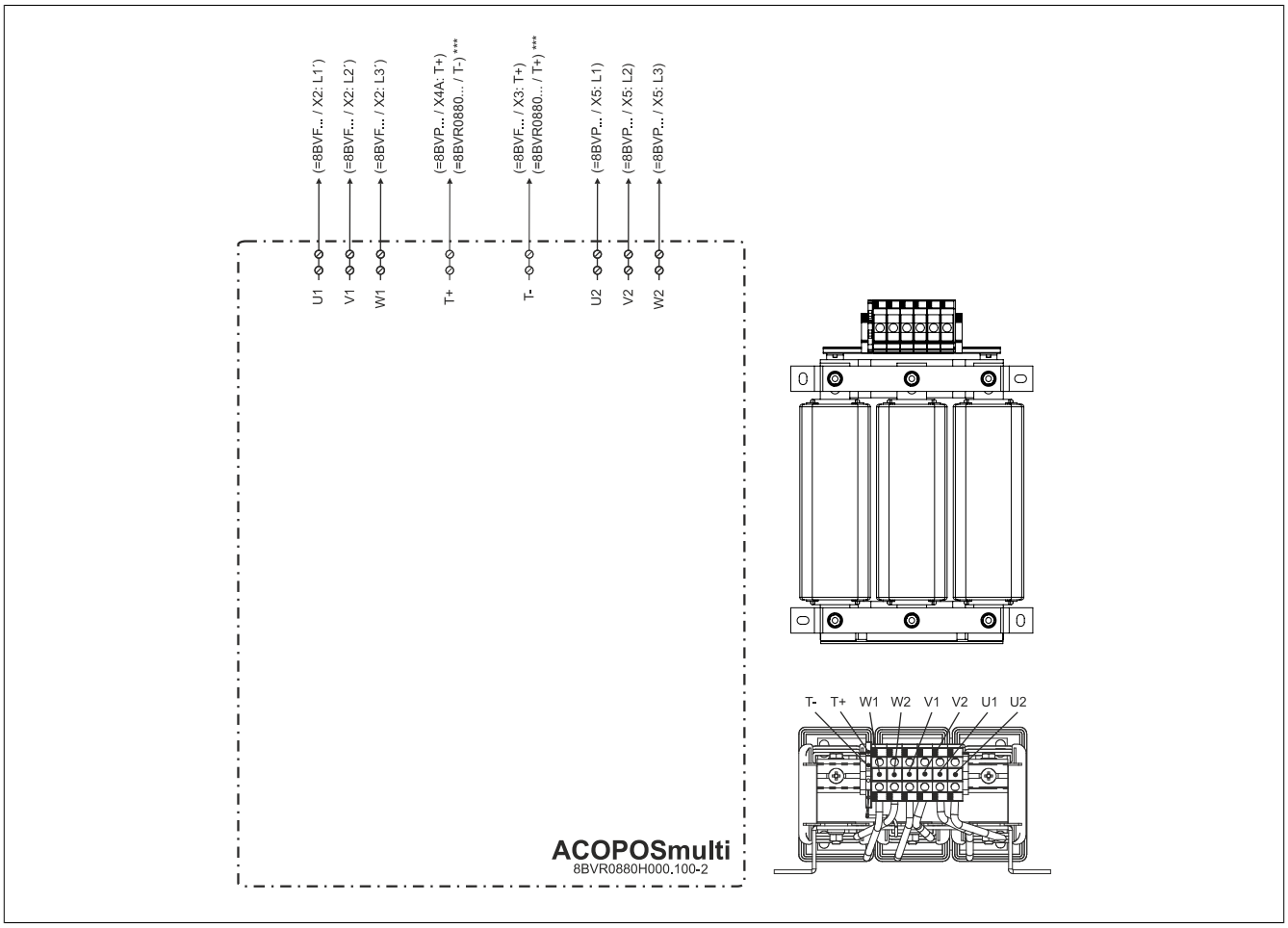

Figure 2: 8BVR0880H000.100-2 - Pinout overview

*** Only relevant for wiring variants in combination with 8BVP1650 power supply modules.
The mains connection for 8BVP1650 power supply modules can have one of two different wiring variations (2x 8BVF0880 + 1x 8BVR1650 or 2x 8BVF0880 + 2x 8BVR0880) depending on the 8BVR regeneration choke used. See section "8BVP1650 mains connection" for more details.

5.2 Input/Output circuit diagram

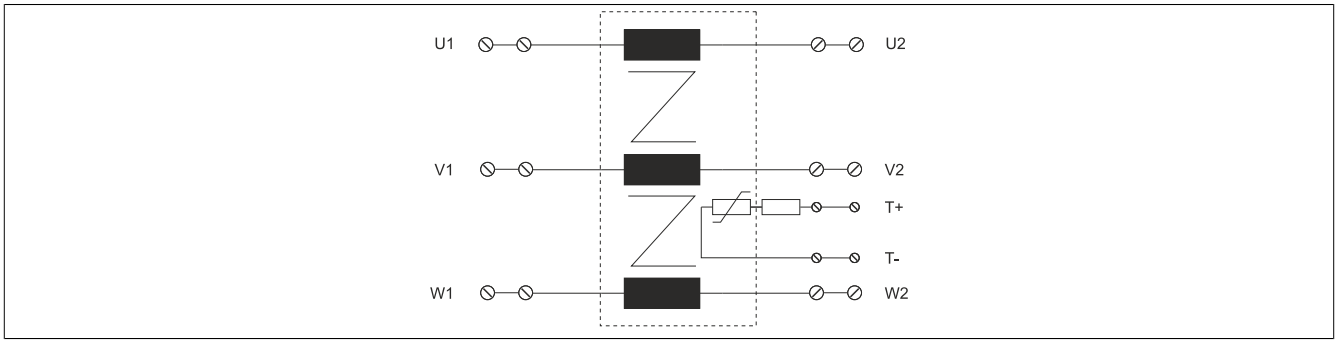

Figure 3: 8BVR0880H000.100-2 - Input/Output circuit diagram

Information:

ACOPOSmulti 8BVR regeneration chokes do not contain a protective ground connection because all exposed electrically conductive parts are isolated from the active parts using reinforced insulation.

Warning!

When installing ACOPOSmulti regeneration chokes make sure that the windings and connection wires are strongly insulated from the neighboring electrically conductive components (e.g. control cabinet wall).

If this reinforced insulation is implemented solely through the use of an air gap, a minimum distance to adjacent conductive parts of 8 mm (or 12.7 mm per cULus) is required.