SL0201

Airflow monitor

SLG23CEEAKOW/24VAC

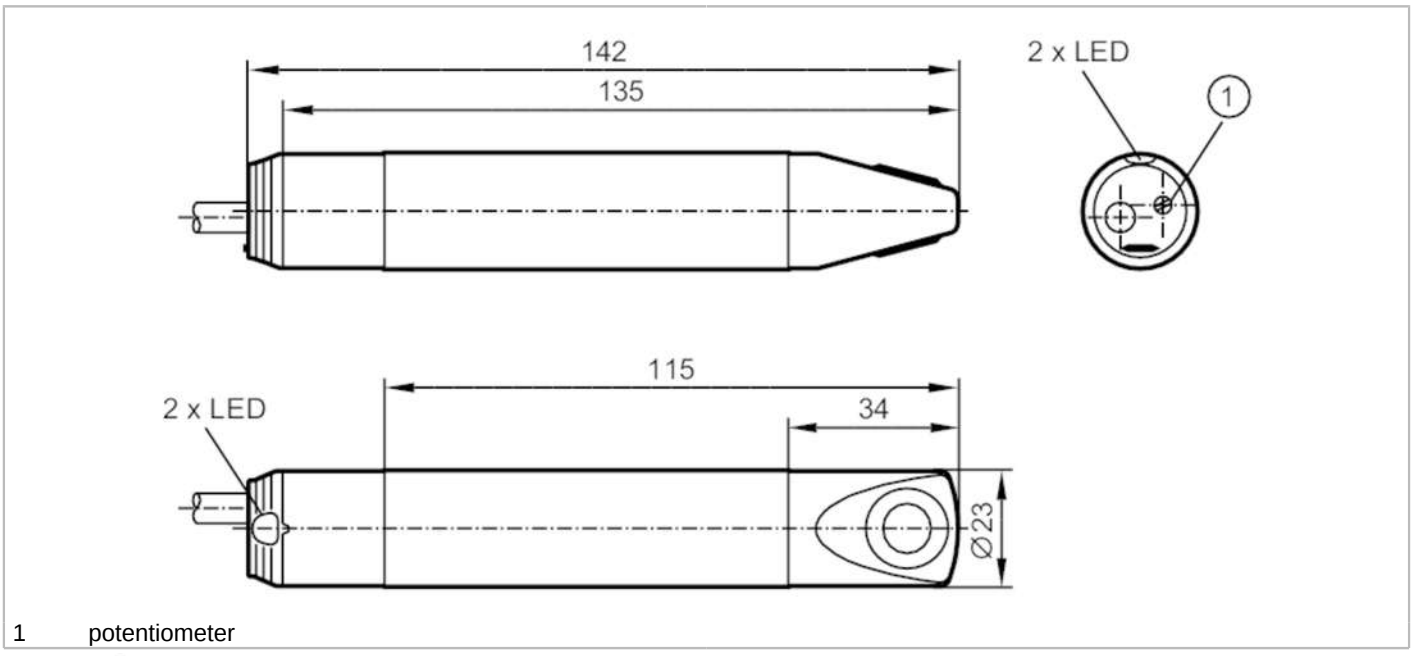

1 potentiometer

Product characteristics		
Number of inputs and outputs		Number of relay outputs: 1
Process connection		Ø 23 mm
Application		
Medium temperature	[°C]	-10...50
Pressure rating	[bar]	1
Electrical data		
Operating voltage	[V]	21.6...26.6 AC
Current consumption	[mA]	50
Min. insulation resistance	[MΩ]	100; (500 V DC)
Reverse polarity protection		no
Power-on delay time	[s]	60
Inputs / outputs		
Number of inputs and outputs		Number of relay outputs: 1
Outputs		
Output signal		switching signal
Number of relay outputs		1
Contact rating		3 A (30 V DC / 250 V AC // cULus: 30 V DC / AC)
Switching function flow monitoring		relay energised when flow is present
Short-circuit proof		no
Overload protection		no
Measuring/setting range		
Gases		
Setting range	[cm/s]	100...1000

SL0201

Airflow monitor

SLG23CEEAKOW/24VAC

Greatest sensitivity	[cm/s]	100...400	
Accuracy / deviations			
Temperature gradient	[K/min]	5	
Response times			
Response time	[s]	3...60	
Gases			
Response time	[s]	3...60	
Software / programming			
Adjustment of the switch point		potentiometer	
Operating conditions			
Ambient temperature	[°C]	-10...50	
Storage temperature	[°C]	-25...85	
Protection		IP 65	
Tests / approvals			
MTTF	[years]	877	
UL approval		UL Approval no.	I030
		File number UL	E174189
Mechanical data			
Weight	[g]	198.5	
Dimensions	[mm]	Ø 23 / L = 142	
Materials		housing: PBT; sensor surface: titanium	
Materials (wetted parts)		PBT; titanium	
Process connection		Ø 23 mm	
Displays / operating elements			
Display		function	1 x LED, red
		function	1 x LED, green
Electrical connection			
Required protection		miniature fuse to IEC60127-2 sheet 1; ≤ 5 A; fast acting	
Accessories			
Items supplied		Mounting clamp: 1, E40048	
Remarks			
Remarks		Recommendation Check the safe functioning of the unit after a short circuit.	
Pack quantity		1 pcs.	

SL0201

Airflow monitor

SLG23CEEAKOW/24VAC

Electrical connection

Cable: 2 m, PUR; 4 x 0.5 mm²

Connection

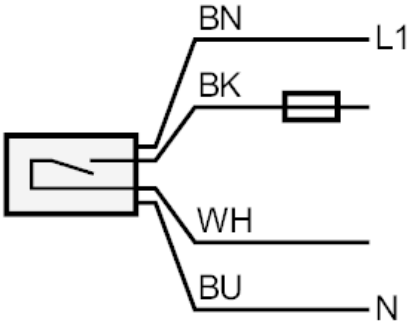

Note miniature fuse to IEC60127-2 sheet 1 ≤ 5 A fast acting
Core colours :

BN =	brown
BU =	blue
BK =	black
WH =	white