PE2594

Pressure sensor with display

PE-010-REG14-MFRKG/US/ /E

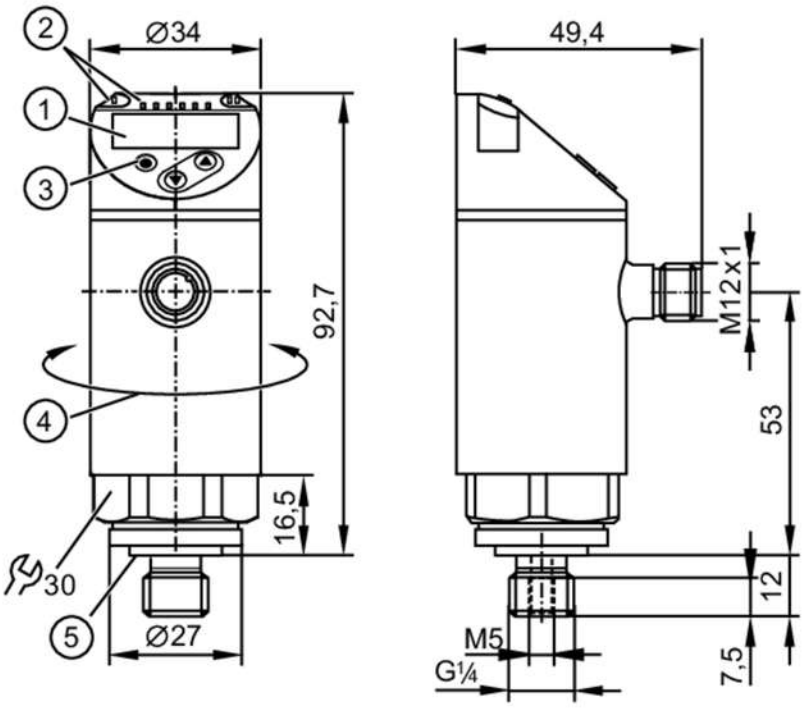

1 alphanumeric display 4-digit red/green
2 LEDs Display unit / switching status
3 programming button
4 upper part of the housing can be rotated 345°
5 Sealing

IO-Link KTW/W270 Reg31

Product characteristics				
Number of inputs and outputs	Number of digital outputs: 2; Number of analogue outputs: 1			
Measuring range	-1...10 bar	-14.6...145 psi	-100...1000 kPa	-0.1...1 MPa
Process connection	threaded connection G 1/4 external thread internal thread:M5; DIN EN ISO 1179-2			
Application				
Special feature	Gold-plated contacts			
Measuring element	ceramic-capacitive pressure measuring cell			
Application	for industrial applications			
Media	liquids and gases			
Medium temperature [°C]	-25...80			
Min. bursting pressure	150 bar	2175 psi	15 MPa	
Pressure rating	75 bar	1087 psi	7.5 MPa	
Vacuum resistance	-1000 mbar	-0.1 MPa		
Type of pressure	relative pressure			
Electrical data				
Operating voltage [V]	18...30 DC; (to SELV/PELV)			
Current consumption [mA]	< 35			
Min. insulation resistance [MΩ]	100; (500 V DC)			
Protection class	III			
Reverse polarity protection	yes			

PE2594

Pressure sensor with display

PE-010-REG14-MFRKG/US/ /E

Power-on delay time	[s]	0.3
Integrated watchdog		yes
Inputs / outputs		
Number of inputs and outputs		Number of digital outputs: 2; Number of analogue outputs: 1
Outputs		
Total number of outputs		2
Output signal		switching signal; analogue signal; IO-Link; (configurable)
Electrical design		PNP/NPN
Number of digital outputs		2
Output function		normally open / normally closed; (parameterisable)
Max. voltage drop switching output DC	[V]	2
Permanent current rating of switching output DC	[mA]	250
Switching frequency DC	[Hz]	< 500
Number of analogue outputs		1
Analogue current output	[mA]	4...20; (scalable 1:5)
Max. load	[Ω]	500
Analogue voltage output	[V]	0...10; (scalable 1:5)
Min. load resistance	[Ω]	2000
Short-circuit protection		yes
Type of short-circuit protection		pulsed
Overload protection		yes

Measuring/setting range					
Measuring range	-1...10 bar	-14.6...145 psi	-100...1000 kPa	-0.1...1 MPa	
Set point SP	-0.94...10 bar	-13.6...145 psi	-0.094...1 MPa		
Reset point rP	-0.98...9.96 bar	-14.2...144.4 psi	-0.098...0.996 MPa		
Analogue start point	-1...8 bar	-14.6...116 psi	-0.1...0.8 MPa		
Analogue end point	1...10 bar	14.6...145 psi	0.1...1 MPa		
In steps of	0.02 bar	0.2 psi	0.002 MPa		

Accuracy / deviations		
Switch point accuracy	[% of the span]	< ± 0,4; (Turn down 1:1)
Repeatability	[% of the span]	< ± 0,1; (with temperature fluctuations < 10 K; Turn down 1:1)
Characteristics deviation	[% of the span]	< ± 0,25 (BFSL) / < ± 0,5 (LS); (Turn down 1:1; BFSL = Best Fit Straight Line; LS = limit value setting)
Hysteresis deviation	[% of the span]	< ± 0,1; (Turn down 1:1)
Long-term stability	[% of the span]	< ± 0,05; (Turn down 1:1; per 6 months)
Temperature coefficient zero point	[% of the span / 10 K]	0,2; (-25...80 °C)
Temperature coefficient span	[% of the span / 10 K]	0,2; (-25...80 °C)

PE2594

Pressure sensor with display

PE-010-REG14-MFRKG/US/ /E

Notes on the accuracy / deviation		switch point accuracy, linearity error under DNV GL: < ± 1%: < ± 1%	
Response times			
Response time	[ms]	< 1.5	
Delay time programmable dS, dr	[s]	0...50	
Damping process value dAP	[s]	0...4	
Damping for the analogue output dAA	[s]	0...4	
Max. response time analogue output	[ms]	3	
Software / programming			
Parameter setting options		hysteresis / window; normally open / normally closed; switch-on/ switch-off delay; Damping; Display unit; current/voltage output	
Interfaces			
Communication interface		IO-Link	
Transmission type		COM2 (38,4 kBaud)	
IO-Link revision		1.1	
SDCI standard		IEC 61131-9	
Profiles		Smart Sensor: Process Data Variable; Device Identification, Device Diagnosis	
SIO mode		yes	
Required master port type		A	
Process data analogue		1	
Process data binary		2	
Min. process cycle time	[ms]	2.3	
Supported DeviceIDs		**Type of operation**	**DeviceID**
		default	463
Operating conditions			
Ambient temperature	[°C]	-25...80	
Storage temperature	[°C]	-40...100	
Protection		IP 65; IP 67	
Tests / approvals			
EMC		DIN EN 61000-6-2	
		DIN EN 61000-6-3	
Shock resistance		DIN EN 60068-2-27	50 g (11 ms)
Vibration resistance		DIN EN 60068-2-6	20 g (10...2000 Hz)
MTTF	[years]	161	
UL approval		UL Approval no.	J012
Pressure Equipment Directive		Sound engineering practice; can be used for group 2 fluids; group 1 fluids on request	
Mechanical data			
Weight	[g]	260.5	
Housing		cylindrical	
Dimensions	[mm]	Ø 34 / L = 92.7	
Materials		stainless steel (316L/1.4404); PBT+PC-GF30; PBT-GF20; PC; EPDM	
Materials (wetted parts)		stainless steel (316L/1.4404); Al2O3 (99.9%; ceramics); EPDM	
Min. pressure cycles		100 million	

PE2594

Pressure sensor with display

PE-010-REG14-MFRKG/US/ /E

Tightening torque [Nm]	25...35; (recommended tightening torque; depends on lubrication, seal and pressure rating)	
Process connection	threaded connection G 1/4 external thread internal thread:M5; DIN EN ISO 1179-2	
Process connection sealing	EPDM	
Restrictor element integrated	no (can be retrofitted)	

Displays / operating elements

Display	Display unit	3 x LED, green (bar, psi, MPa)
	switching status	2 x LED, yellow
	measured values	alphanumeric display, red/green 4-digit

Remarks

Pack quantity	1 pcs.

Electrical connection

Connector: 1 x M12; coding: A; Contacts: gold-plated



Connection

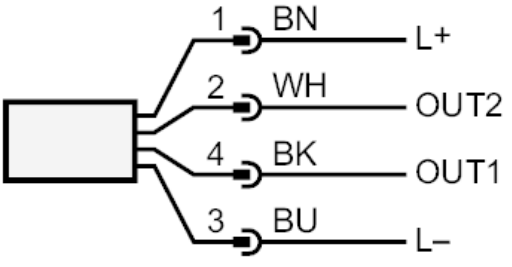

OUT1	switching output or IO-Link
OUT2	switching output or analogue output
	colours to DIN EN 60947-5-2
	Core colours :
BK =	black
BN =	brown
BU =	blue
WH =	white