Brand of NTN corporation

Technical data

UKF210H

Bearing units



Grey cast housing, radial insert ball bearing with adapter sleeve,seal with slinger

KIT CONTENT

UK210G2H, F210

VISUAL (S)

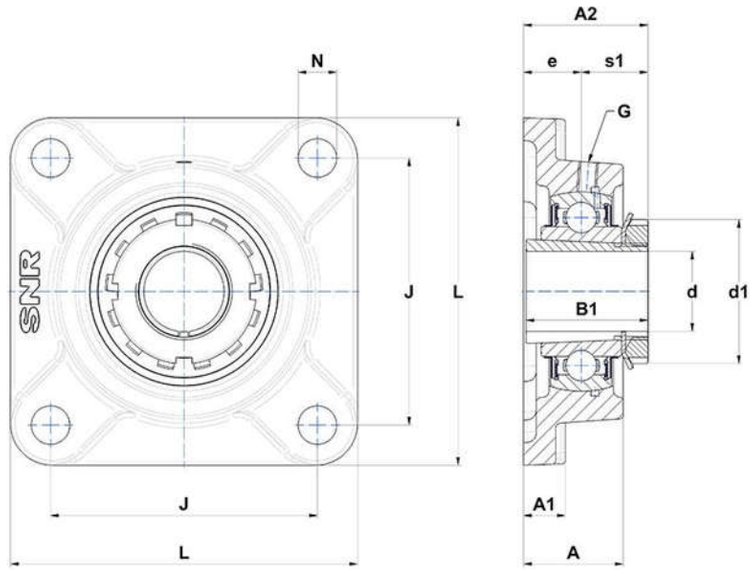

PRODUCT DEFINITION

Brand	SNR
A - Housing height	40 mm
A1 - Housing foot height / flange height	16 mm
A2 - Total height from mounting surface	49,5 mm
B - Width of Inner Ring	31 mm
B1 - Overall width Inner Ring	55 mm

PRODUCT DEFINITION	
d - Shaft diameter	45 mm
d1 - Outer dia of eccent. Lock. collar / nut of adapter sleeve	70 mm
e - Distance mounting surface to bearing center	22 mm
G - Grease fitting	M6x1
J - Mounting holes distance	111 mm
L - Housing width / diameter	143 mm
N - Mounting hole dimension	16 mm
s1 - Distance nut to middle of bearing raceway	27,5 mm

PRODUCT PERFORMANCE	
C - Dynamic load rating	35100000 mN
C0 - Static load rating	23200000 mN
Operating temperature min.	253,15 °K
Operating temperature max.	373,15 °K

OTHER FEATURES	
Mass	2,63 kg
Adapter sleeve designation	H2310