20838-096 HF FRAME TYPE PLUG-IN UNIT FRONT PANEL, REFROFIT SHIELDING WITH STEEL GASKET, 3 U, 14 HP

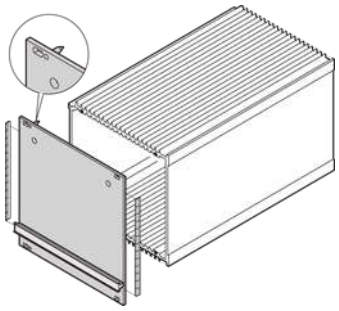

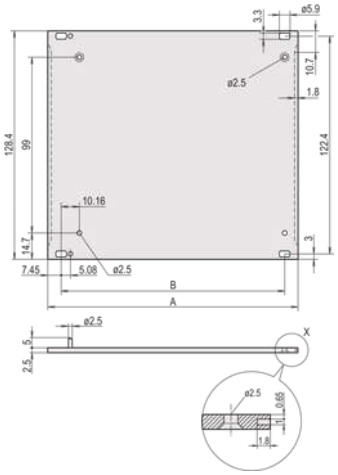

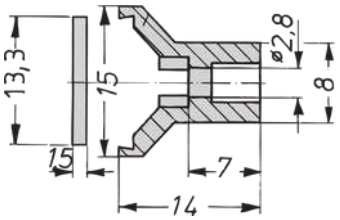

KEY FEATURES

Al, 2.5 mm, front anodized, rear conductive, with lateral slots for EMC stainless steel gasket (please order separately), pressed-in alignment pin; trapezium shaped handle, gray, PPE, UL 94 V-1

Front Panel with handle to bolt onto HF plug-in unit

PRODUCT ATTRIBUTES

Product Type: Side Panel

Type: Front Panel

Rack Height: 3 U

Rack Width: 14 HP

Package Quantity: 5

ADDITIONAL PRODUCT DETAILS

Al, 2.5 mm, front anodized, rear conductive, with lateral slots for EMC stainless steel gasket. (please order separately), pressed-in alignment pin; trapezium shaped handle, gray, PPE, UL 94 V-1.

Please take into consideration that deliveries may be carried out in the stated SPQs (SPQ, e.g. 5 pieces, 10 pieces, 50 pieces, etc.). Differing order quantities (e.g. 2 pieces) may be changed to the next possible delivery quantity = Standard Pack Quantity.

CERTIFICATIONS



North America
All locations
+1.763.422.2661
Chat with us:
schroff.nvent.com

Europe
Straubenhardt, Germany
+49.7082.794.0
Betschdorf, France
+33.3.88.90.64.90
Warsaw, Poland
+48.22.209.98.35
Assago, Italy
+39.02.932.7141
Chat with us:
schroff.nvent.com

Asia
Shanghai, China
+86.21.2412.6943
Qingdao, China
+86.532.8771.6101
Singapore
+65.6768.5800
Shin-Yokohama, Japan
+81.45.476.0271
Chat with us:
schroff.nvent.com

Middle East & India
Dubai, United Arab Emirates
+971.4.378.1700
Bangalore, India
+91.80.6715.2001
Istanbul, Turkey
+90.216.250.7374
Chat with us:
schroff.nvent.com



Our powerful portfolio of brands:
nVent.com **CADDY ERICO HOFFMAN RAYCHEM SCHROFF TRACER**

© 2024 nVent. All nVent marks and logos are owned or licensed by nVent Services GmbH or its affiliates. All other trademarks are the property of their respective owners.

nVent reserves the right to change specifications without notice.