Max. 130 m³/h

S-Panther

DC axial fans

☐ 80 x 32 mm



- **Material:** Housing: GRP[1] (PBT)
  Impeller: GRP[1] (PA)
- **Direction of air flow:** Exhaust over struts
- **Direction of rotation:** Counterclockwise, looking towards rotor
- **Connection:** Via single wires AWG 26, TR 64
- **Weight:** 160 g

- **Possible special versions:**
  (See chapter DC fans - specials)
  - Speed signal
  - Go / NoGo alarm
  - Alarm with speed limit
  - External temperature sensor
  - Internal temperature sensor
  - PWM control input
  - Analog control input
  - Moisture protection
  - Salt spray protection
  - Degree of protection: IP 54 / IP 68

1) Fiberglass-reinforced plastic

Series 8300 N
VWC0080PUFBS

Nominal data	Air flow	Air flow	Nominal voltage	Voltage range	Sound pressure level	Sound power level	Sintec sleeve bearings / Ball bearings	Power consumption	Nominal speed	Temperature range	Service life L_{10} (40 °C) ebm-papst standard / Service life L_{10} (T_{max}) ebm-papst standard	Life expectancy L_{10IPC} (40 °C) see page 15	Curve
Type	**m³/h**	**cfm**	**VDC**	**VDC**	**dB(A)**	**Bel(A)**	□/■	**Watts**	**rpm⁻¹**	**°C**	**Hours**	**Hours**	
8312 NL	32	19	**12**	6...15	24	4.0	■	1.0	2 300	-20...+75	105 000 / 42 500	180 000	①
8312 NM	50	30	**12**	6...15	32	4.5	■	1.5	3 300	-20...+75	102 500 / 40 000	170 000	②
8312 NN	56	33	**12**	6...15	33	4.7	■	1.8	3 700	-20...+75	97 500 / 37 500	162 500	③
8314 NN	56	33	**24**	12...28	33	4.7	■	1.8	3 700	-20...+75	97 500 / 37 500	162 500	③
8318 NN	56	33	**48**	36...60	33	4.7	■	1.5	3 700	-20...+75	97 500 / 37 500	162 500	③

Subject to change

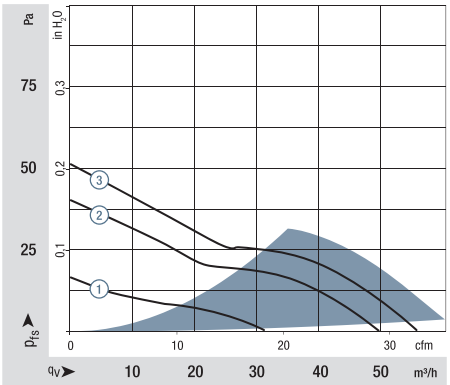

Air performance measured according to: ISO 5801.
Installation category A, without contact protection.
Noise: Total sound power level L_{WA} ISO 10302 measured on a hemisphere with a radius of 2 m.
Sound pressure level L_{pA} measured at 1 m distance from fan axis.
The values given are applicable only under the specified measuring conditions and may differ depending on the installation conditions.
In the event of deviation from the standard configuration, the parameters must be checked after installation!
For detailed information see http://www.ebmpapst.com/general conditions

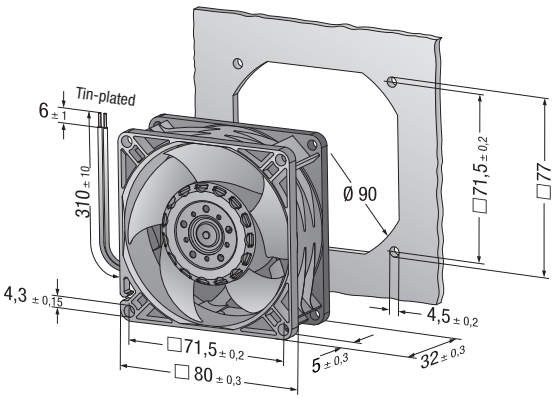

ebmpapst