3600NF series

Sealed toggle switches for outdoor applications

Distinctive features and specifications

UG1006-A



- ❑ **Sealing obtained by :**
  - O-ring between lever and bushing
  - half-length boot and nylon washer (supplied mounted)
  - elastomer gasket between cover and case
  - molded-in terminal inserts
  - sealing washer U60
- ❑ **Solid silver contacts**
- ❑ **UL approved**

A

ELECTRICAL SPECIFICATIONS

- Max. current/voltage rating with resistive load : 12A 28VDC - 6A 250VAC
- Initial contact resistance : 10 mΩ max.
- Insulation resistance : 1.000 MΩ min. at 500VDC
- Dielectric strength :
  2.500 Vrms 50 Hz min. between terminals
  3.000 Vrms 50 Hz min. between terminals and frame
- Electrical life : 10.000 cycles at full load

MATERIALS

- Case : phenolic resin
- Actuator : brass, nickel plated
- Bushing : brass, nickel plated
- Contacts : solid silver

GENERAL SPECIFICATIONS

- Torque : 1,50 Nm (1.10 Ft.lb) max. applied to nut
- Panel thickness : 2 mm (.079) max. with all accessories
- Operating temperature : -40°C to +85°C

AGENCY APPROVAL

Availability : consult factory for details or approved models.

Marking : to order switches marked UL, complete last box of ordering format.

ABOUT THIS SERIES

Dimensions : first dimensions are in mm while inches are shown as bracketted numbers.

Mounting accessories : 1 sealing boot U1151, 1 hex nut U166, 1 nylon washer U21 and 1 sealing washer U60. See section I.

Packaging unit : 25 pieces per type and colour.

3600NF series

Sealed toggle switches for outdoor applications

Screw terminals - solder lug/quick-connect terminals

MODEL STRUCTURE

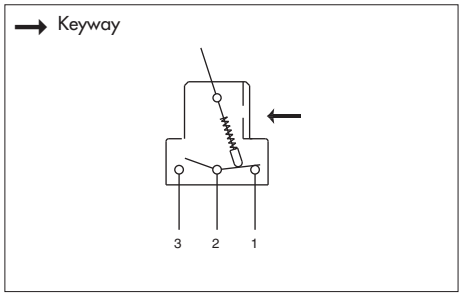

- 1 and 2 pole configurations

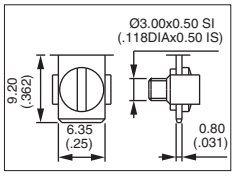

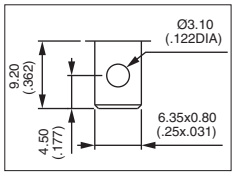

MODEL STRUCTURE

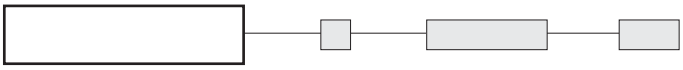

Screw terminals - single pole



	III	II	I
	2-1		2-3
3631NF	ON	-	OFF
3635NF	MOM	-	ON
3636NF	ON	-	ON
3637NF	MOM	OFF	MOM
3638NF	ON	OFF	MOM
3639NF	ON	OFF	ON

Keyway

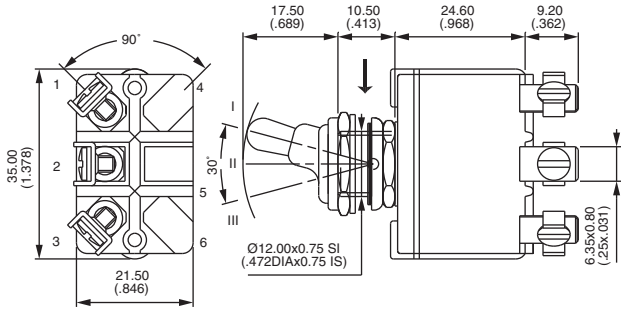

Screw terminals - double pole



	III	II	I
	2-1		2-3
	5-4		5-6
3641NF	ON	-	OFF
3644NF*	ON	ON	ON
3645NF	MOM	-	ON
3646NF	ON	-	ON
3647NF	MOM	OFF	MOM
3648NF	ON	OFF	MOM
3649NF	ON	OFF	ON

Keyway

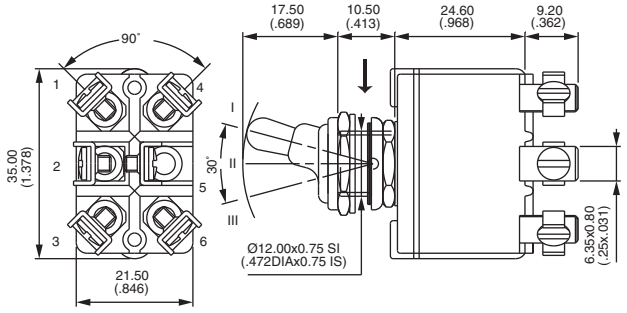

* Function 4 : SP in DP case, see end of catalogue.

Solder lug/quick-connect terminals - single pole



	III	II	I
	2-1		2-3
3631NF/2	ON	-	OFF
3635NF/2	MOM	-	ON
3636NF/2	ON	-	ON
3637NF/2	MOM	OFF	MOM
3638NF/2	ON	OFF	MOM
3639NF/2	ON	OFF	ON

Keyway

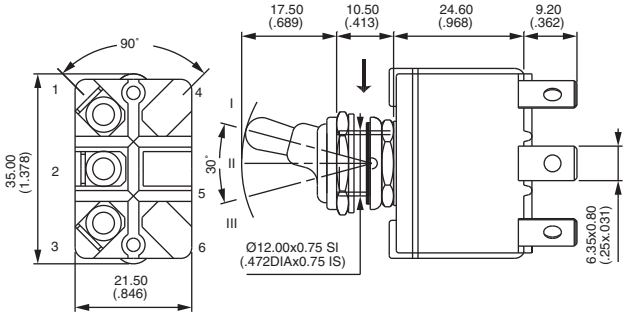

OPTIONS

3600NF series

Sealed toggle switches for outdoor applications

Solder lug/quick-connect terminals

Solder lug and quick-connect terminals - double pole



	III	II	I
	2-1		2-3
	5-4		5-6
3641NF/2	ON	-	OFF
3644NF/2*	ON	ON	ON
3645NF/2	MOM	-	ON
3646NF/2	ON	-	ON
3647NF/2	MOM	OFF	MOM
3648NF/2	ON	OFF	MOM
3649NF/2	ON	OFF	ON

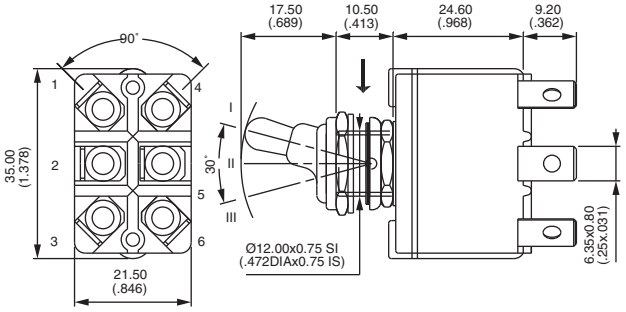

* Function 4 : DP in 4P case, see end of catalogue.

PANEL CUT-OUT

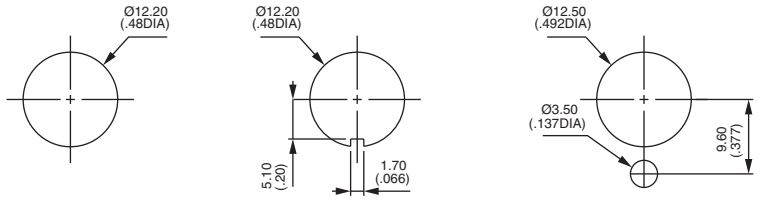

FINISH

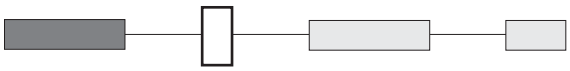

G Matt black finish on lever and nut of sealing boot

SPECIAL LEVER

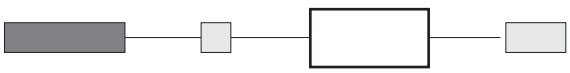

X1052 30 mm (1.181) long lever

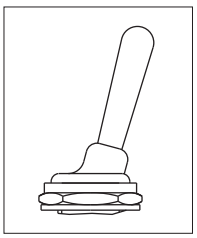

AGENCY APPROVAL



UL

Marking : to order switches marked UL, complete above box with "UL".