Surge-Trap® Pluggable T12 - AC 3P Reinforced

Photovoltaic & Energy Storage SPDs

DIN RAIL - IEC AC Reinforced



General Data

Internal configuration	3+0 R
No. Poles	4-Pole
No. DIN rail modules	4
Network configuration	TNC
IEC SPD Type	Class I+II
EN SPD Type	Type 1+2
Format	Pluggable
Protection Modes	L-PE(N)
Product standards	*IEC 61643-11 *EN 61643-11

RoHS CE UK CA IEC

PART NUMBERS

XXX	320	680
STPT12-5KXXXV-3P-R	83120261	83120243
STPT12-5KXXXV-3P-RM (with Microswitch)	83120262	83120244

SURGE PROTECTION DEVICE (SPD) - IEC TECHNICAL FEATURES

STPT12-5KXXXV-3P-R, STPT12-5KXXXV-3P-RM (with Microswitch)	320	680
Maximum continuous operating voltage (AC) - Uc [V]	640	1360
Nominal voltage AC 50-60 Hz - Un [V]	277/480	480/830
Nominal discharge current (8/20)- In [kA]	20	
Max Discharge Current (8/20) - Imax [kA]	40	
Maximum peak voltage withstand (DC) (L-PE) - Upeak (L-PE) [V]	840	1700
Lightning impulse current (10/350) - Iimp [kA]	5	
Voltage protection level at In - Up [kV]	≤3	≤5
Maximum back-up fuse [A [gG]]	125	
Short circuit withstand- Isccr [kA]	25	
Response time - tA [ns]	≤25	
Dynamic thermal disconnection	Yes	
Thermal protection behaviour	OCM (Open Circuit Mode)	

MECHANICAL AND ENVIRONMENTAL FEATURES

STPT12-5KXXXV-3P-R, STPT12-5KXXXV-3P-RM (with Microswitch)	320	680
Temperature range [ºC]	-40 ... 85	
Humidity range [%]	5 ... 95	
Indication System Type	Green (OK) / Not green (replace)	
Insulating material	PA66 CT1	
Enclosure - IP	IP20	
Flammability class	UL94 V-0	
Torque rating [N m]	3	
Remote indication conductor cross section [mm²]	0.08 ... 1.5	
Remote indication switching capacity [V/A]	AC: 125/3 DC: 250/1	
Remote Indication Torque [N m]	0.2	

DATASHEET

This document is subject to change at any time without notice ep.mersen.com | Lepanto 49 · 08223 Terrassa, Barcelona Spain © 2024 Cirprotec SLU | All rights reserved

Surge-Trap® Pluggable T12 - AC 3P Reinforced

Photovoltaic & Energy Storage SPDs
DIN RAIL - IEC AC Reinforced

DIMENSIONS AND WEIGHT

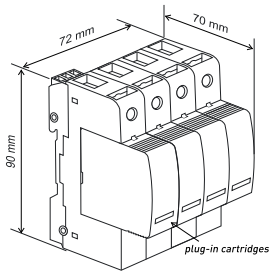

STPT12-5KXXXV-3P-R STPT12-5KXXXV-3P-RM (with Microswitch)	320	680
Net Weight [kg]	0.427	0.644
Gross weight [kg]	0.454	0.71
Packaging dimensions (H x W x L) [mm]	117 × 78 × 90	120 × 75 × 105

INTERNAL CONFIGURATION

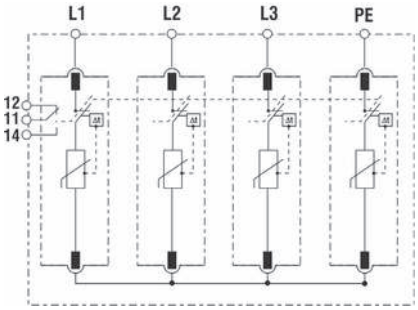

REPLACEMENT CARTRIDGES

STPT12-5KXXXV-3P-R STPT12-5KXXXV-3P-RM (with Microswitch)	320	680
SP12-5KXXXV (Line)	83120020	83120025

This document is subject to change at any time without notice ep.mersen.com | Lepanto 49 · 08223 Terrassa, Barcelona Spain © 2024 Cirprotec SLU | All rights reserved