Round cylinders - Series 27

Product code: 27T2A25A0025

Datasheet creation date: 19/05/2026 09:50

Check the most updated document online click here





TECHNICAL DATA

Series	27
Diameter (mm)	25
Version	T = rear end block with axial connection
Operation	2 = double - acting
Materials	A = rolled stainless steel
Construction	A = standard
Stroke (mm)	25
Seal options	= standard
Rod length (mm)	0
Certifications	= standard

Products designed for industrial applications. General terms and conditions for sale are available on www.camozzi.com.
This document contains a brief description of the products offered by Camozzi Automation at time of publication.
For more complete and up to date information about the Camozzi Automation product range, please refer to our online catalogue at https://shop.camozzi.com

Round cylinders - Series 27

Product code: 27T2A25A0025

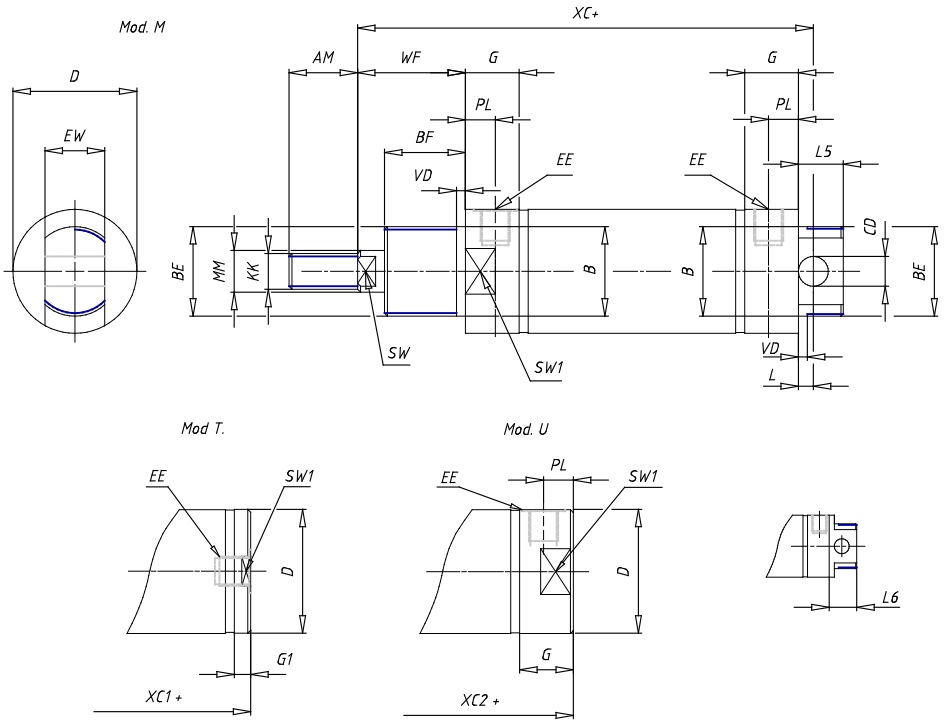

DIMENSIONS

AM (mm)	16
Ø B (mm)	18
BF (mm)	12
BE	M18x1.5
Ø CD (mm)	8
Ø D (mm)	26.5
EE	G1/8
EW (mm)	14
G (mm)	15.5
G1 (mm)	8.0
KK	M10x1.25
L (mm)	9
Ø MM (mm)	10
L5 (mm)	17
L6 (mm)	0
PL (mm)	9
SW (mm)	9
VD (mm)	3
WF (mm)	16.5
XC (mm)	78.5
XC1 (mm)	62.0
XC2 (mm)	69.5
SW1 (mm)	24

BG (mm)	0
BG1 (mm)	0.0
FB	0
RT	0
Ø RT1 (mm)	0
TC (mm)	0
TF (mm)	0.0

Products designed for industrial applications. General terms and conditions for sale are available on www.camozzi.com.
This document contains a brief description of the products offered by Camozzi Automation at time of publication.
For more complete and up to date information about the Camozzi Automation product range, please refer to our online catalogue at https://shop.camozzi.com