Tamper-proof Dual Thermostat (Pre-set) FTD 011 Series



- **NO and NC in one casing**
- **Default temperature settings**
- **High switching accuracy**
- **Clip fixing**

Two thermostats in one casing:
Tamper-proof (Pre-set) Thermostat/Contact breaker (NC) for regulating heaters or for switching signal devices when temperature has fallen below the minimum value. The contact opens when temperature is rising.
Tamper-proof (Pre-set) Thermostat/Contact maker (NO) for regulating filter fans, heat exchangers or for switching signal devices when temperature limit has been exceeded. The contact closes when temperature is rising.

Heaters and cooling equipment can be switched independently from each other with a temperature offset as opposed to the usual change-over contacts.

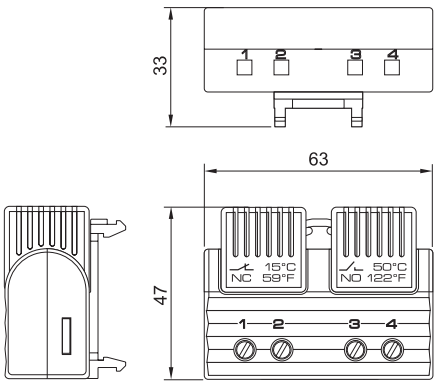

Technical Data

Sensor element	thermostatic bimetal
Contact type	snap-action contact
Service life	> 100,000 cycles
Max. switching capacity	250VAC, 5 (1.6) A
	120VAC, 10 (2) A
	30WDC
Max. inrush current	16AAC for 10 sec.
Connection	4-pole terminal for 2.5mm², torque 0.8Nm max.
Mounting	clip for 35mm DIN rail, EN 60715
Casing	plastic according to UL94 V-0, light grey
Dimensions	47 x 63 x 33mm
Weight	approx. 40g
Fitting position	variable
Operating / Storage temperaure	-40 to +80°C (-40 to +176°F) / -45 to + 80°C (-49 to +176°F)
Operating / Storage humidity	max. 90% RH (non-condensing)
Protection type	IP20
Approvals	VDE + UL File No. E164102

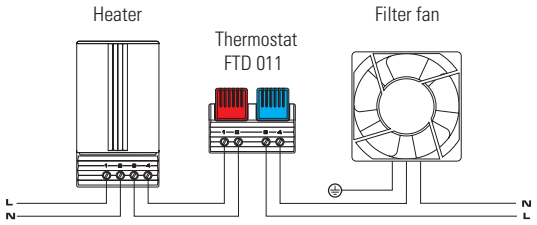

Example of connection

Art. No.	Contact breaker (NC)		Contact maker (NO)	
	Switch-off temperature	Switch-on temperature	Switch-on temperature	Switch-off temperature
01163.0-00	+15°C / +59°F (± 5K tolerance)	+5°C / +41°F (± 5K tolerance)	+50°C / +122°F (± 6K tolerance)	+40°C / +104°F (± 7K tolerance)
01163.0-01	+25°C / +77°F (± 5K tolerance)	+15°C / +59°F (± 5K tolerance)	+60°C / +140°F (± 6K tolerance)	+50°C / +122°F (± 7K tolerance)
01163.0-02	+15°C / +59°F (± 5K tolerance)	+5°C / +41°F (± 5K tolerance)	+35°C / +95°F (± 6K tolerance)	+25°C / +77°F (± 7K tolerance)
01163.0-03	+25°C / +77°F (± 5K tolerance)	+15°C / +59°F (± 5K tolerance)	+50°C / +122°F (± 6K tolerance)	+40°C / +104°F (± 7K tolerance)
Art. No.	**Contact maker (NO)**		**Contact maker (NO)**	
	Switch-on temperature	**Switch-off temperature**	**Switch-on temperature**	**Switch-off temperature**
01164.0-00	+50°C / +122°F (± 6K tolerance)	+40°C / +104°F (± 7K tolerance)	+60°C / +140°F (± 6K tolerance)	+50°C / +122°F (± 7K tolerance)

Specifications are subject to change without notice. Errors and omissions excepted. Suitability of this product for its intended use and any associated risks must be determined by the end customer/ buyer in its final application.
02.05.2011