

- **Long life and high performance**
- **Light weight stainless steel design**
- **Low cost temperature measurement**

The ETP21 is specifically designed for applications that require an easy mountable and robust temperature sensor. Flexibility in design and available options provide solutions for most requirements of machine builders, special purpose vehicles and motor manufacturers. The measurement element is the well proven PT100.

Specifications	
Accuracy	< +/- 1.0% at RT
Output → Supply	0 - 10V → 12 - 32 VDC 0 - 5V → 6 - 32 VDC 4 - 20 mA → 10 - 32 VDC 0.5 - 4.5V → 5 VDC, ratiometric
Current consumption	< 7.5 mA
Short circuit protection	Yes
Reverse voltage protection	Yes
Temperature	-40°C to +150°C
Shock	1000g, 11 msec., 1/2 Sine
Vibration	16G peak, 20 to 2000 Hz
Sealing	IP67
max. Operating pressure	M10; G1/4: 600 bar static BC: 60 bar static
Housing	304 stainless steel
Process connection	see select table
Electr. connection	see select table
Weight	appr. 30g

TEMPERATURE SENSOR ETP21

Dimensions Cable Connection

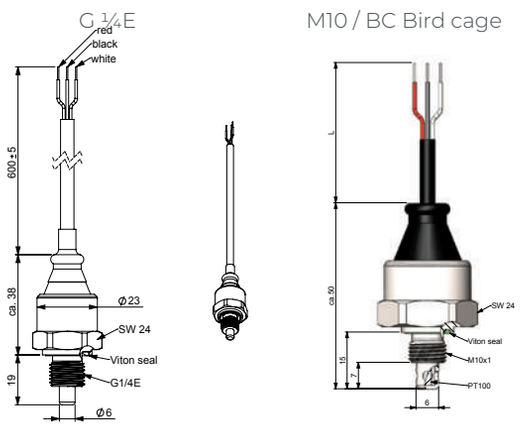

Dimensions Packard Connection

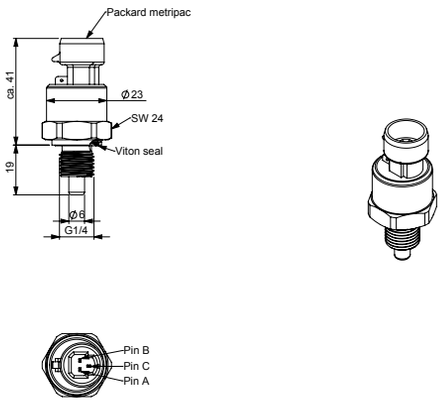

Connections						
Type						
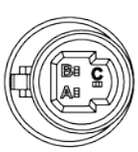	Connector Packard Metripack	Output	PIN A	PIN B	PIN C	
		0.5 - 4.5V 0....5V 0...10V	- supply	+ supply	+ output	
		4...20mA	- current output	+ supply	n./a.	
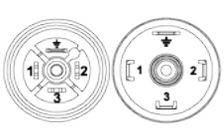	Miniature connector EN175301-803-C	Output	PIN 1	PIN 2	PIN 3	
		0.5 - 4.5V 0....5V 0...10V	+ supply	-supply	+ output	
		4...20mA	+ supply	-current output	n./a.	
	M12x1 round connector	Output	PIN 1	PIN 2	PIN 3	PIN 4
		0.5 - 4.5V 0....5V 0...10V	+ Supply	n./a.	- Supply	+ Output
		4..20mA	+ Supply	n./a.	- Current output	n./a.
	Cable	Output	red	black	white	
		0.5 - 4.5V 0....5V 0...10V	+ supply	- supply	+ output	
		4..20mA	+ supply	- current output	n.a.	

TEMPERATURE SENSOR ETP21

Ordering information

(Please use the characters in the chart below to create your product code)

Sample code ETP21 - A - (-40/150) - 5 - A

Process connection	
A	G 1/4" E A-E
M10	M10x1 Male
BC	Bird cage with M10x1

Output Signal	
1	0...10 V
2	4...20 mA
4	0...4 V
5	0.5...4.5 V ratiometric

Electr. Interface	
A	600mm cable
B	Miniature - connector DIN EN 175301-803 C
C	Connector, Packard Metripack
F	M12x1 4 Round connector

If you require a customized solution for your program contact our sales team.