

Bus termination

Part no. SWD4-RC8-10
Article no. 116020

Delivery programme

Product range			SmartWire-DT accessories
Accessories			Network terminator
Function			For connecting each SmartWire-DT line
Connection to SmartWire-DT			yes
For use with			EU5C-SWD… EU5E-SWD… SWD4-...F8-24...
For use with			for 8-pole flat band conductor

Approvals

UL File No.	E29184
UL CCN	NKCR
CSA File No.	2324643
CSA Class No.	3211-07
NA Certification	UL listed, CSA certified
Specially designed for NA	No

Part no.			SWD4-RC8-10

General

Standards			IEC/EN 61131-2 EN 50178
Dimensions (W x H x D)		mm	48.5 x 34.5 x 10
Weight		g	10
Mounting position			As required

Ambient conditions, mechanical

Protection type (IEC/EN 60529, EN50178, VBG 4)			IP20
Vibrations (IEC/EN 61131-2:2008)			
Constant amplitude 3,5 mm		Hz	5 - 8.4
Constant acceleration 1 g		Hz	8.4 - 150
Mechanical shock resistance (IEC/EN 60068-2-27) semi-sinusoidal 15 g/11 ms		Impacts	9
Drop to IEC/EN 60068-2-31	Drop height	mm	50
Free fall, packaged (IEC/EN 60068-2-32)		m	0.3

Electromagnetic compatibility (EMC)

Overvoltage category			II
Pollution degree			2
Electrostatic discharge (IEC/EN 61131-2:2008)			
Air discharge (Level 3)		kV	8
Contact discharge (Level 2)		kV	4
Electromagnetic fields (IEC/EN 61131-2:2008)			
80 - 1000 MHz		V/m	10
1.4 - 2 GHz		V/m	3
2 - 2.7 GHz		V/m	1
Radio interference suppression (SmartWire-DT)			EN 55011 Class A
Burst (IEC/EN 61131-2:2008, Level 3)			
SmartWire-DT cables		kV	1
Radiated RFI (IEC/EN 61131-2:2008, Level 3)		V	10

Climatic environmental conditions

Operating ambient temperature (IEC 60068-2)		°C	- 25 - + 55
Condensation			Take appropriate measures to prevent condensation
Storage		°C	- 40 - 70
relative humidity, non-condensing (IEC/EN 60068-2-30)		%	5 - 95

Connection options

SWD-In			Plug, 8-pole

Number of insertion cycles			≥ 200
Current consumption		mA	17

Technical data ETIM 4.0

Type of mechanical accessory			-
Type of electrical accessory			-

Dimensions

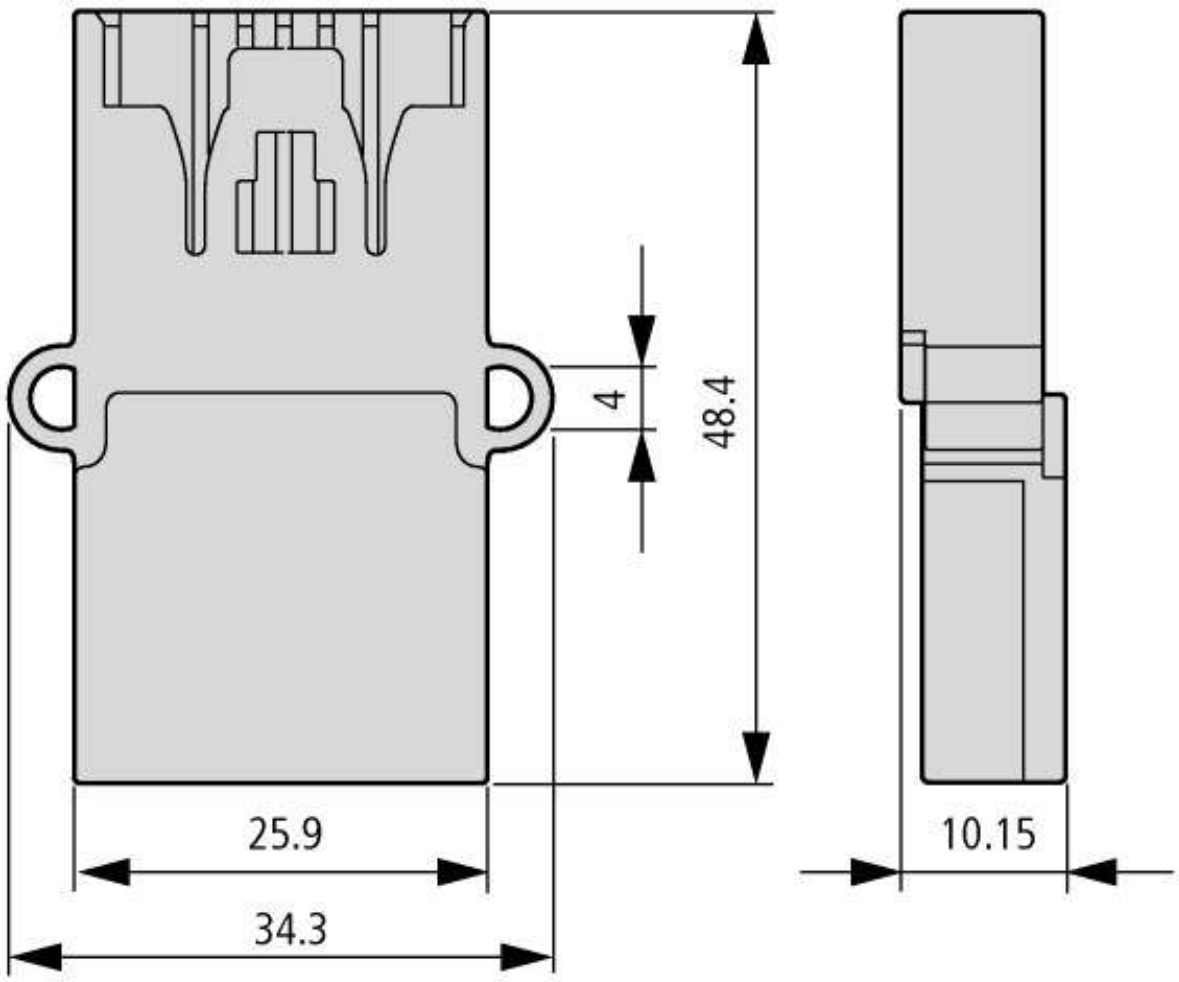

Bus termination
Network terminator

Additional product information (links)

IL04716001Z (AWA1160-2512) SmartWire-DT: Wiring material and accessories	
IL04716001Z (AWA1160-2512) SmartWire-DT: Wiring material and accessories	ftp://ftp.moeller.net/DOCUMENTATION/AWA_INSTRUCTIONS/IL04716001Z2010_11.pdf
MN05006002Z-EN (AWB2723-1617) SmartWire-DT, The System	
MN05006002Z-DE (AWB2723-1617) SmartWire-DT, Das System - Deutsch	ftp://ftp.moeller.net/DOCUMENTATION/AWB_MANUALS/MN05006002Z_DE.pdf
MN05006002Z-EN (AWB2723-1617) SmartWire-DT, The System - English	ftp://ftp.moeller.net/DOCUMENTATION/AWB_MANUALS/MN05006002Z_EN.pdf
MN05006002Z-IT (AWB2723-1617) SmartWire-Darwin, Il sistema - italiano	ftp://ftp.moeller.net/DOCUMENTATION/AWB_MANUALS/MN05006002Z_IT.pdf

© 05/2012 by Eaton Industries GmbH