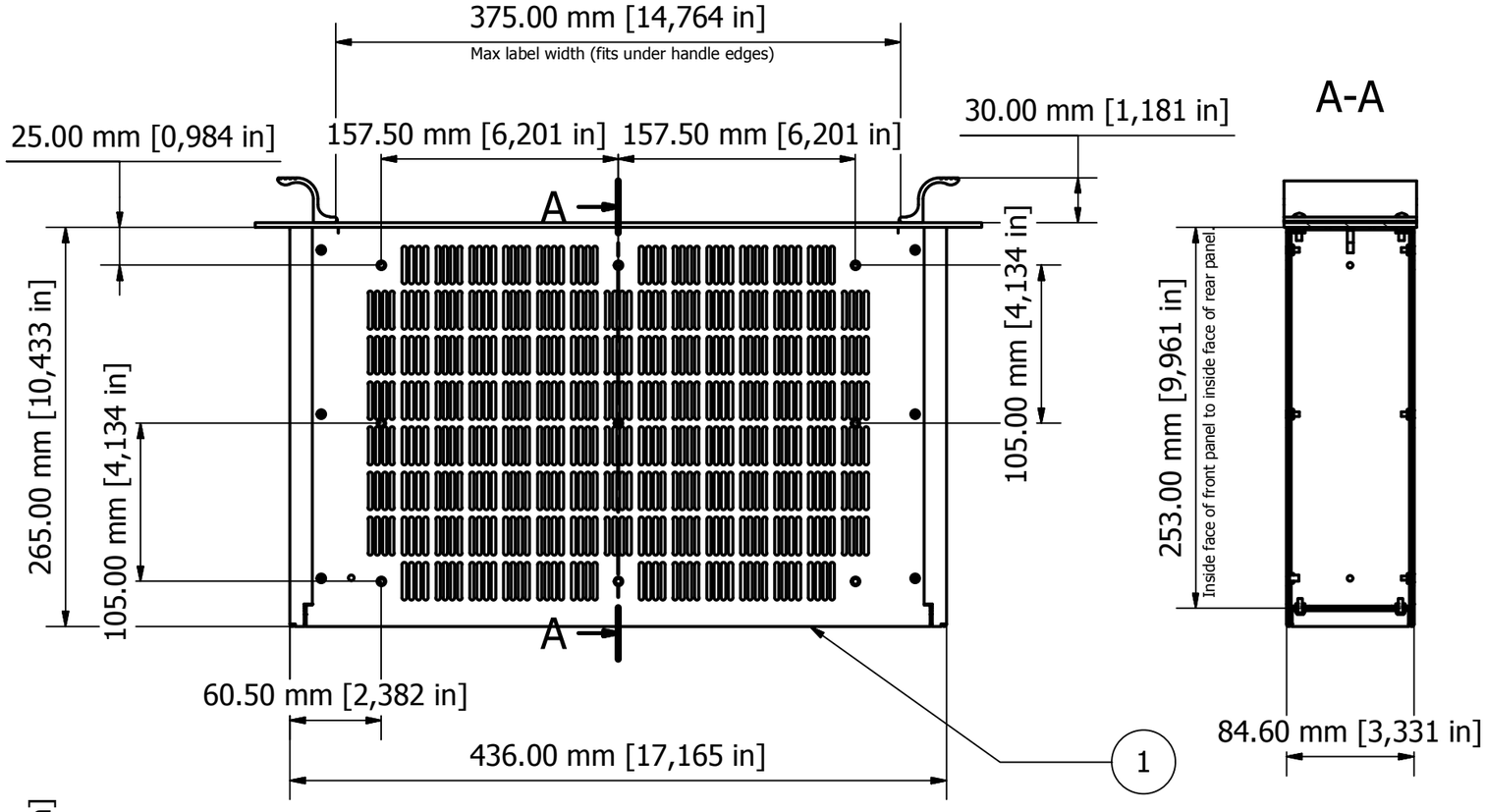

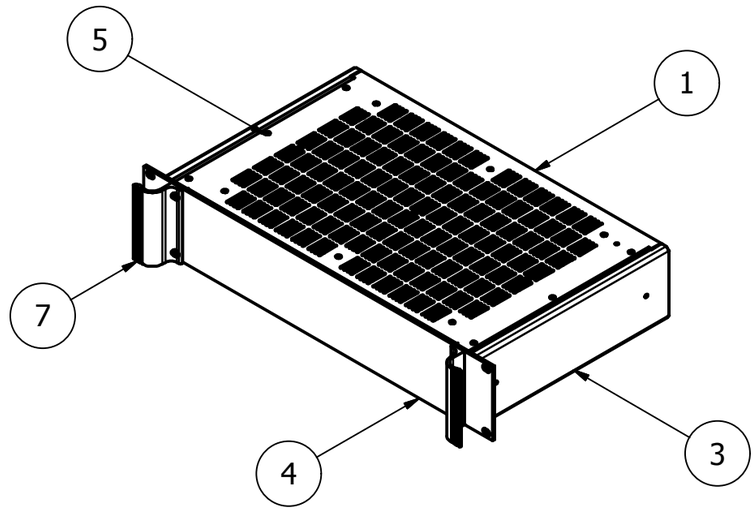

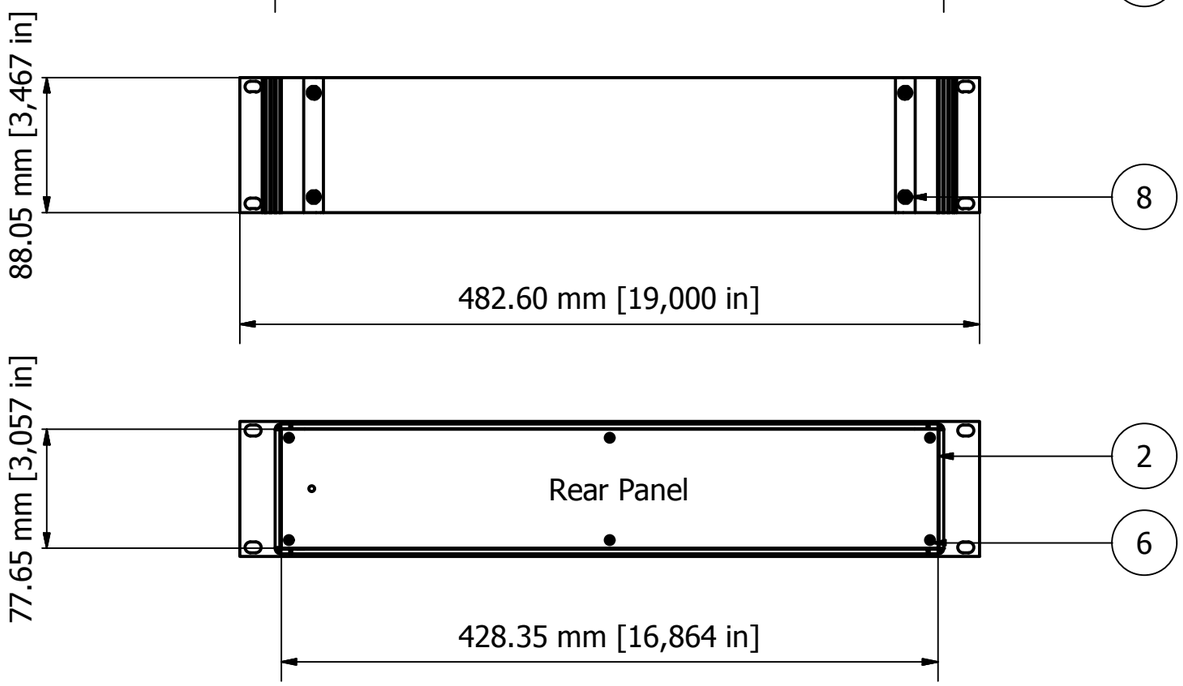

NOTES.

Case metalwork is made from 1.5 mm aluminium and painted RAL 9005 fine texture black.
Front panel is made from 3 mm aluminium with a clear etch & anodise finish.
Handles are made from an aluminium extrusion & also painted RAL 9005 fine texture black.
All parts are fitted with M4 studs for earth use.

PARTS LIST			
ITEM	QTY	PART NUMBER	DESCRIPTION
1	2	M6203049	Vented Covers
2	1	M6201029	Rear Panel
3	2	M6202239	Side Panel
4	1	M6219020	Front Panel
5	12	M3x8 CSK Screw (B)	Cover Screws
6	6	M3x8 Pan Screw (B)	Rear Panel Screws
7	2	M6200209	Handles
8	4	M4x16 CSK Screw (B)	Front Panel Screws

FIRST ANGLE PROJECTION

Designed by	Description	Date	Scale
L Clark	Combimet 2U x 19" x 265 mm Vented	02/03/2012	1:1

METCASE ENCLOSURES
15 Brunel Way, Segensworth East, Fareham, Hampshire, UK. PO15 5TX
Tel: +44 (0)1489 583858 Email: metcase@okw.co.uk

METCASE www.metcase.com

Part Number	Issue	Sheet
M6219249	1	1 / 1

© OKW Enclosures Ltd (Date as shown). This drawing contains proprietary information of OKW Enclosures Ltd and is tendered subject to the following conditions. The information be retained in confidence, not be reproduced or copied, and not be used or incorporated in any product, unless permission is obtained in writing from OKW Enclosures Ltd.