WWW.TENGTOOLS.COM

53" PRO35™ ROLLER CABINET 9 DRAWERS RED



- Sturdy 3-piece heavy gauge steel cabinet frame
- Tool storage treated with a phosphate free 5-step rust prevention process and powder coat finish
- Features an 18 mm laminated MDF top and four 6" swivel castors (two braked)
- Nine fully extendable drawers with varying heights (75 mm, 154 mm, 160 mm) compatible with TengTools Tool Control System for customizable organization
- Drawers equipped with smooth running ball bearing slides and EVA mats to reduce noise and protect tools
- 3-digit combination lock for secure storage of valuable tools

The TengTools 53" PRO35™ roller cabinet TSW53R9 with a matte red finish is a robust and spacious tool storage solution specifically engineered for professionals who value an organized and efficient workspace. This roller cabinet, with an overall width of 1350 mm, depth of 460 mm, and height of 813 mm (983 mm with castors), is a part of the TengTools mobile tool storage assortment. This unit features nine fully extendable drawers, each designed to cater to a variety of storage needs. It includes six drawers with a height of 75 mm, two drawers with a height of 154 mm, and a top drawer with a height of 160 mm to accommodate larger items. With a drawer capacity of 40 kg, this TengTools 53" PRO35™ roller cabinet is a high-capacity, durable, and versatile tool storage solution. The cabinet's compatibility with the TengTools Tool Control System allows professionals to customize their tool storage to meet their specific requirements. The drawers can accommodate any combination of TengTools modules that match the same overall dimensions as in the following examples: the regular width drawers have room for four TengTools TC1 modules plus a TengTools TTX4 module, while the full-width top drawer can accommodate eight TC1 modules and two TCX4 modules. This capacity ensures maximum organization and quick accessibility for a wide range of tools. Each drawer is equipped with reliable and smooth running ball bearing slides. A noise reducing EVA mat lines each drawer to minimise tool movement. A notable feature of this cabinet is the hard-wearing 18 mm laminated MDF top, offering a sturdy and functional workarea. Additionally, the cabinet is designed with holes on both sides for accessories, enhancing its utility and adaptability. WIth its 3-piece heavy gauge steel frame the tool cabinet is built for longevity and resilience, which is further emphasized by a 5-step phosphate-free rust prevention process. Mobility is facilitated by four 6" heavy-duty swivel castors, two of which are braked, ensuring both ease of movement and stability when stationary. A comfort-grip handle on the side of the cabinet enhances maneuverability. The cabinet also features a 3-digit combination lock for enhanced security.

General information

Country of origin: Taiwan
Barcode: 5020385215276
Tarriff code Europe: 9403208000
ECCN US: EAR99
UNSPSC: 24112401

Dimensions

Net weight (g): 152340
Width (mm): 1350
Depth (mm): 460
Height (mm): 813
Height with castors (mm): 993
Max static load: 1340 kg
Max dynamic load: 840 kg
Number of drawer: 9
Drawer capacity: 9 × 40 kg
Drawer depth: 9 × 380 mm
Drawer height: 6 × 75 mm, 2 × 154 mm, 1 × 160 mm
Drawer width: 8 × 575 mm, 1 × 1215 mm

Attributes

Product type: Mobile Tool Storage
Colour: Red
Type of storage: Roller cabinet
Castor size: 6" x 2"
Swivel castors: 2
Braked swivel castors: 2
Type of work top: 18 mm laminated MDF

Features



Technical changes and errors may occur. 01-08-2024 20:00

DESIGNED IN SWEDEN

TengTools is a Swedish company present in more than 30 markets worldwide, and offers hand tools in smart storage solutions for demanding professionals within the automotive, maintenance and engineering sectors, as well as motor sport enthusiasts who aspire to use the same tools as top mechanics across the globe.

Sandbergsvägen 3
441 39 Alingsås, Sweden

SPARE PART LIST

TSW53R9

Version: 4

WWW.TENGTOOLS.COM

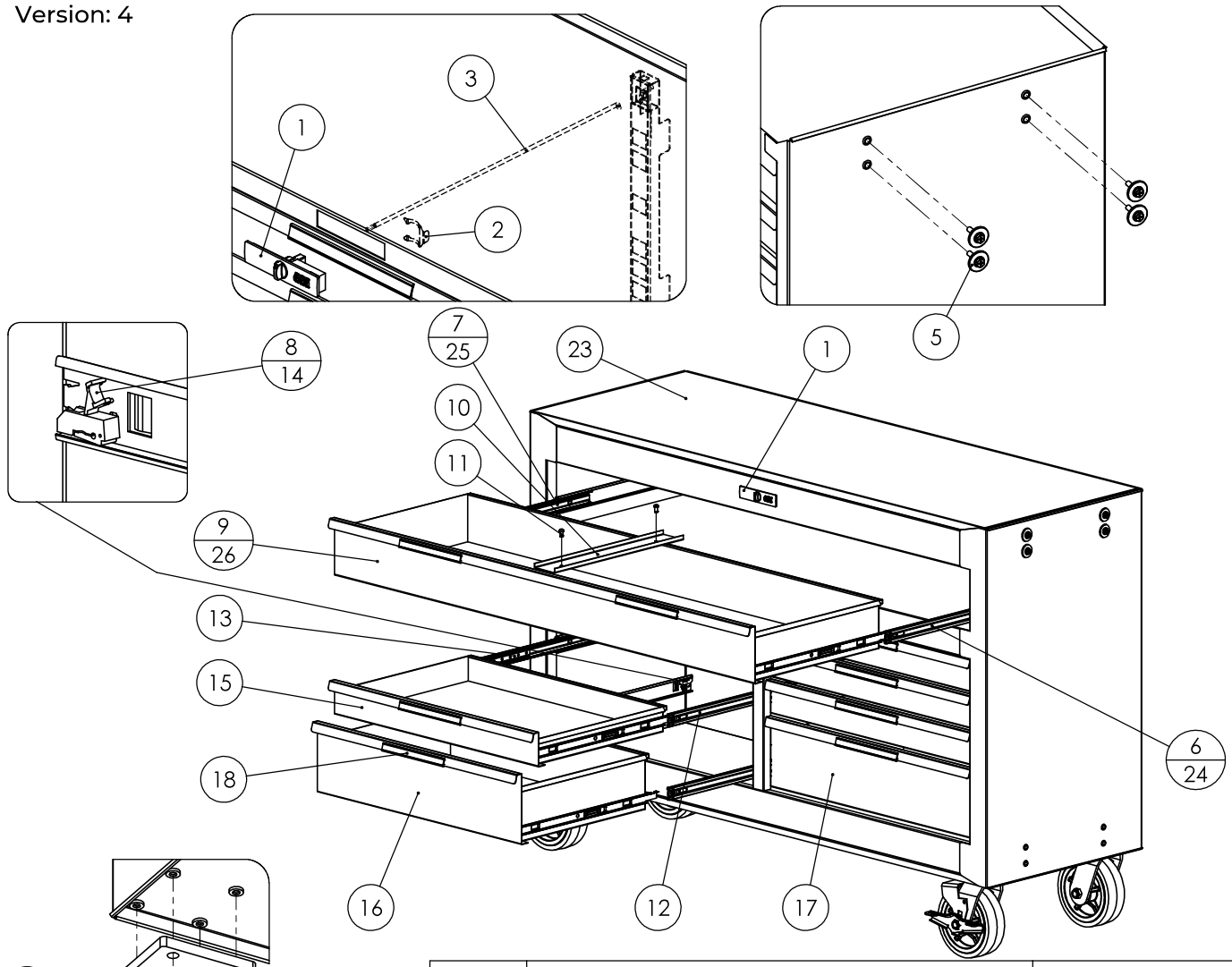

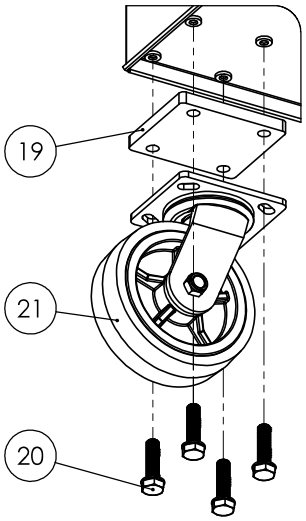

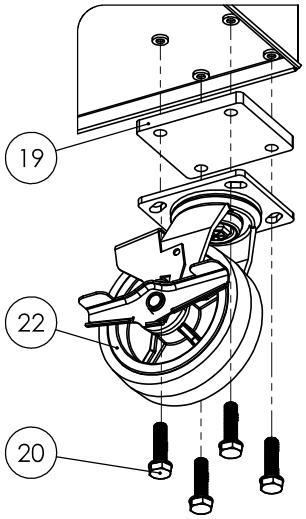

POS	DESCRIPTION	ITEM ID
1A	Combination lock 180°	TC-180CLOCK
1B	Key cylinder lock 180° (optional)	TC-180KEYLOCK
2	Cam for lock (included in Pos 1)	TCW806N-02
3	Locking bar	TCW603-01
4	Side handle	TCBSH
5	Screws for side handle (4pcs)	TCW603-08
6	Slider 16" 51 mm Right (1pc)	TCW713-18
7	Slider 16" 51 mm Left (1pc)	TCW713-19
8	Clip for sliders (included in Pos 6 & 7)	TCW806LN-19
9	Drawer 1215 x 380 x 160 mm Red	TSW53R-160
10	Divider for 53" drawer	TCW809N-18
11	Screws for divider 53" drawer	TCW809N-19
12	Slider 16" 36 mm Right (1pc)	TCW810N-05
13	Slider 16" 36 mm Left (1pc)	TCW810N-06
14	Clip for sliders 36 mm (included in Pos 14 & 15)	TCW807N-16
15	Drawer 575 x 380 x 75 mm Red	TSW26R-75
16	Drawer 575 x 380 x 154 mm Red with Logo	TSW26RF-150
17	Drawer 575 x 380 x 154 mm Red	TSW25R-150
18A	Aluminium drawer handle (3 pcs)	ALUE803
18B	Aluminium drawer handle (4 pcs)	ALUE804
19	Plastic spacer for caster 12 mm (1 pc)	TCW806LN-03
20	Screws for casters (4 pcs)	TCW806LN-08
21	Swivel casters 6" x 2" (1 pc)	TCW713-12
22	Swivel casters with brake 6" x 2" (1 pc)	TCW713-11
23	1340 x 454 x 18 MDF Worktop	TC-TB06
24	Slider 16" 76 mm Right (1 pc)	TSW53R-24
25	Slider 16" 76 mm Left (1 pc)	TSW53R-25
26	Drawer 1201 x 380 x 160 mm Red	TSW53R-160N