E12494

Connecting cable with socket

ADOGD040ZDS00,5H04

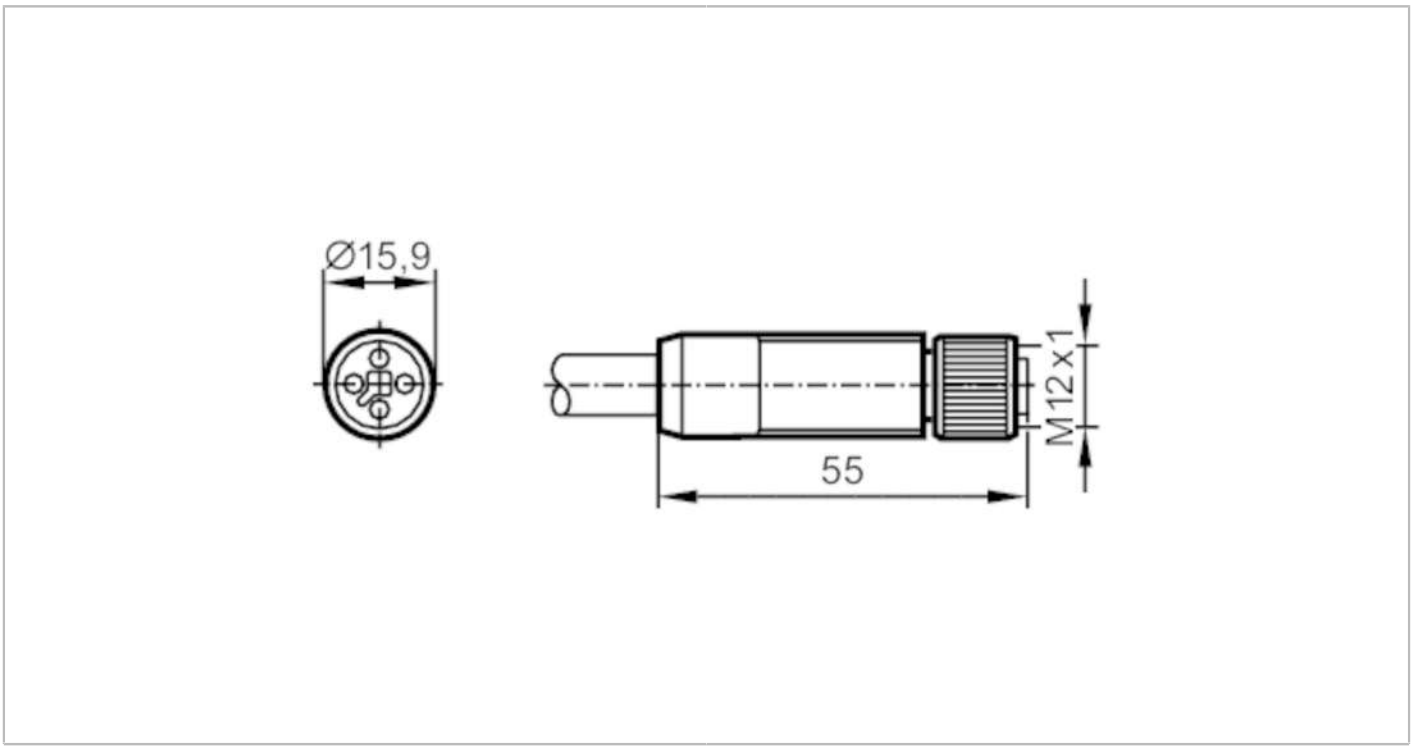

Application		
Special feature		Gold-plated contacts
Design		power cable, T-coded
Electrical data		
Operating voltage	[V]	< 60 DC
Max. current load total	[A]	12
Operating conditions		
Ambient temperature	[°C]	-25...85
Protection		IP 67
Mechanical data		
Weight	[g]	84.8
Dimensions	[mm]	15.4 x 15.4 x 52.8
Materials		PP
Moulded-body material		TPU
Material nut		diecast zinc, nickel-plated
Remarks		
Pack quantity		1 pcs.

E12494

Connecting cable with socket

ADOGD040ZDS00,5H04

Electrical connection

Cable: 0.5 m, PUR, black, Ø 8 mm; 4 x 1.5 mm²

Electrical connection - socket

Connector: 1 x M12, straight; coding: T; Moulded body: TPU; Locking: diecast zinc, nickel-plated; Contacts: gold-plated



Connection

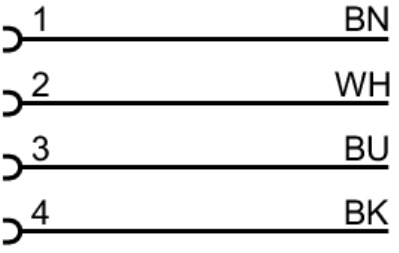

	Core colours :
BK =	black
BN =	brown
BU =	blue
WH =	white