REED SWITCHES - Specifications

Contact Protection

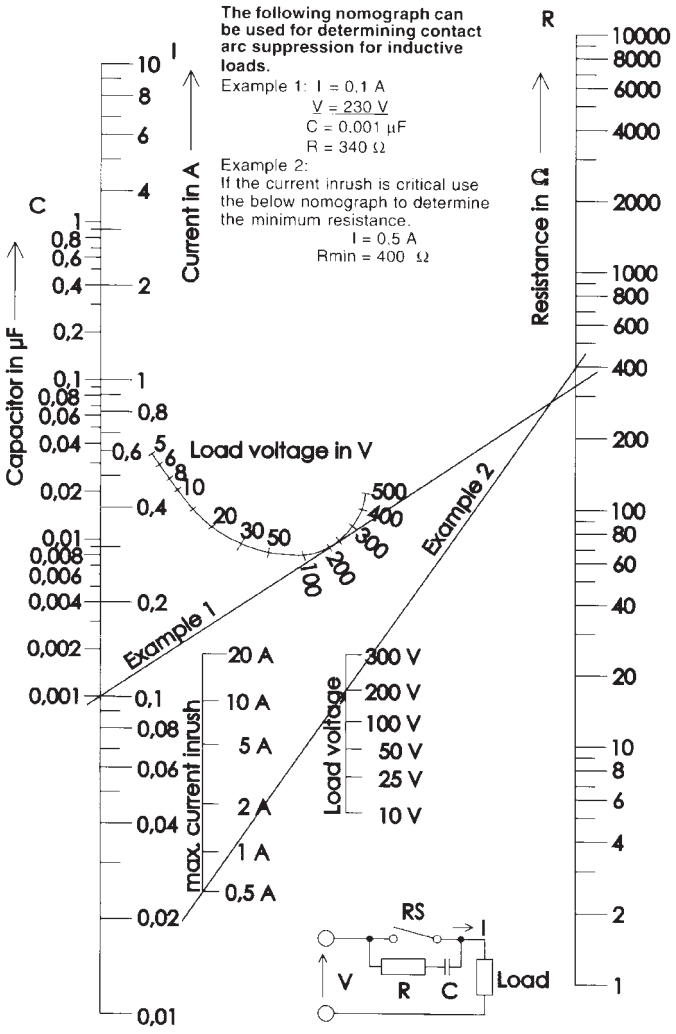

Capacitive Loads

Unlike inductive loads, capacitive and lamp loads are prone to high inrush currents which can lead to faulty operation and even contact welding.
When switching charged capacitors (including cable capacitance) a sudden unloading can occur, the intensity of which is determined by the capacity and length of the connecting leads to the switch. This inrush peak can be reduced by a series of resistors. The value of these resistors is dependent on the particular application but should be as high as possible to ensure that the inrush current is within the allowable limits.

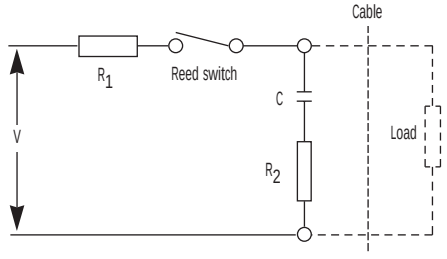

The above diagram illustrates a resistor/capacitor network for protecting a Reed Switch against high inrush currents. R_1 and/or R_2 are used depending upon circuit conditions.

With lamp load applications it is important to note that cold lamp filaments have a resistance 10 times smaller than already glowing filaments. This means that when being turned-on, the lamp filament experiences a current flow 10 times greater than when already glowing. This high inrush current can be reduced to an acceptable level through the use of a series of current-limiting resistors. Another possibility is the parallel switching of a resistor across the switch. This allows just enough current to flow to the filament to keep it warm, yet not enough to make it glow.

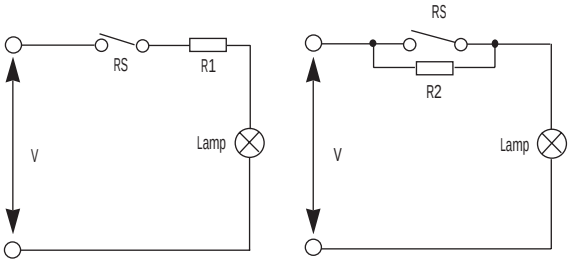

Lamp load with parallel or current limiting resistor across the switch

Cutting and Bending

As the Reed Switch blades are part of the magnetic circuit of a Reed Switch shortening the leads results in increased pull-in and drop-out values.

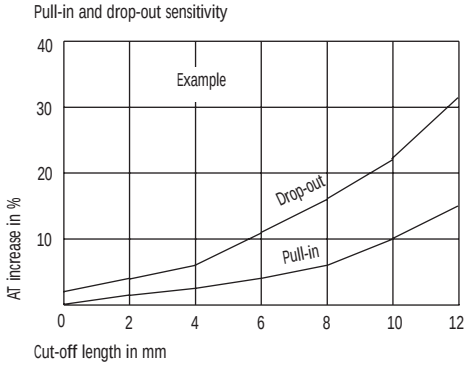

When cutting or bending Reed Switches, it is important that the glass body should not be damaged. Therefore, the cutting or bending point should be no closer than 3mm (.118) to the glass body.

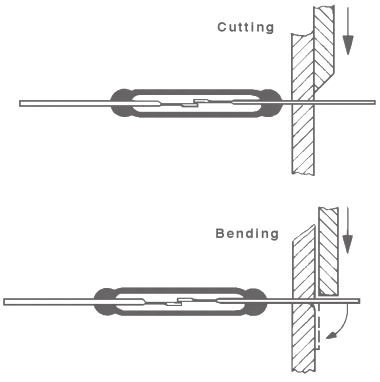

All dimensions are nominal, in millimetres (inches) unless otherwise stated.
As part of the groups policy of continued product improvement, specifications may change without notice. Our sales office will be pleased to help you with the latest information on our products.

REED SWITCHES - Specifications

Actuation of Reed Switches with a Permanent Magnet
Examples of switching with the use of a moving magnet.

Direct Actuation:
A magnet moved perpendicularly towards and away from a Reed Switch turns it off and on one time.

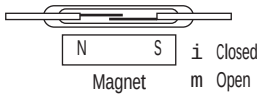

A magnet moved parallel to a Reed Switch operates it from one to three times.

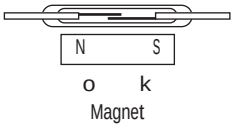

A magnet swung towards and away from a Reed Switch operates it one time.

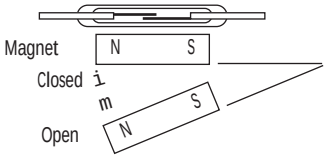

A ring magnet moved parallel to the Reed Switches axis operates it from one to three times.

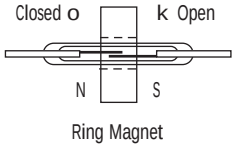

In General:
For all Reed Switches the standard pull-in sensitivity is given in the table. Other pull-in sensitivities are available on request.







Rotation:
Examples of switching through rotational movement.

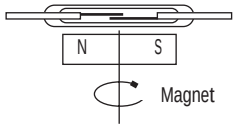

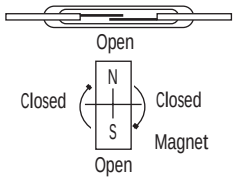

Indirect Actuation: Shielding
With the stationary arrangement of a Reed Switch and magnet, the contact Reeds are closed. Should the magnetic field be diverted away from the Reed Switch by a shield of ferro-magnetic material placed between the switch and the magnet, the contacts will open. When the shield is removed, the contact Reeds become magnetically actuated and close.

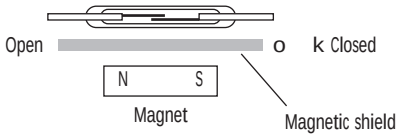

Normally Closed and Bistable Reed Switches:
All Reed Switches are available in a normally closed or bistable version.

Pull-in Sensitivity Tolerance:
The given pull-in sensitivity of the Reed Switch has a test equipment tolerance of ± 2 AT.

The materials used for Reed Switch magnets are generally ALNICO (an aluminium nickel cobalt alloy), a ceramic (barium ferrite or another metal oxide) or rare earth magnets. Due to their specific magnetic characteristics, the types of magnets differ in shape: ALNICO magnets are bar magnets with a length/diameter ratio of 3/1 to 5/1; oxide magnets are generally disc or moulded magnets. Also important to note is the difference in temperature coefficient:
ALNICO: 0.02%/K, oxide: 0.2% /K

Life Expectancy:
The life expectancy of a Reed Switch is about 10^5 ... 10^6 switching cycles with maximum power. With a low load the life expectancy can reach $5x10^8$ operations. The mechanical life expectancy can reach at least 10^9 operations. Through the switching of inductive, capacitive and lamp loads, the life expectancy is considerably reduced due to exceeding the specified maximum current.

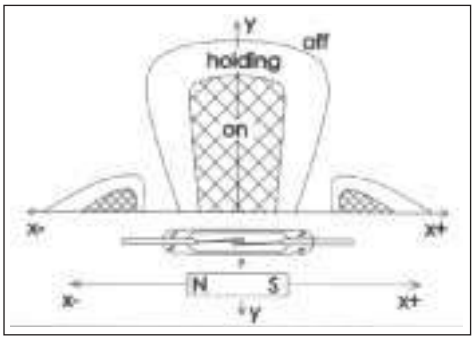

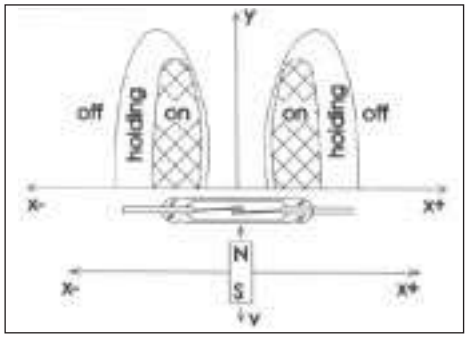

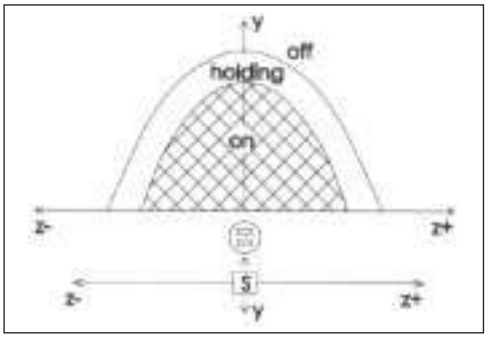

All dimensions are nominal, in millimetres (inches) unless otherwise stated.
As part of the groups policy of continued product improvement, specifications may change without notice. Our sales office will be pleased to help you with the latest information on our products.