Top View of Assembly

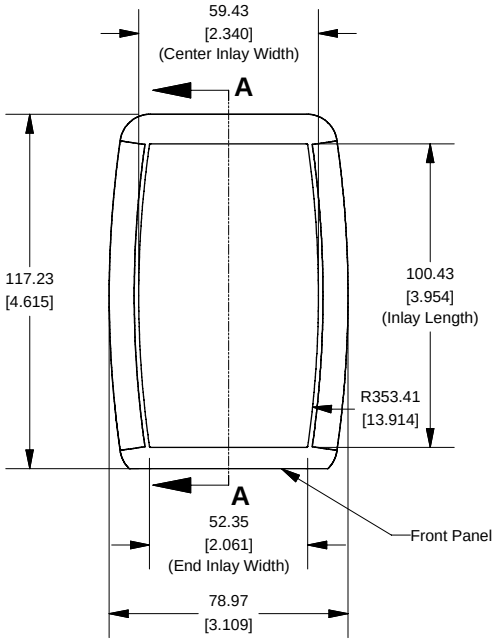

End View of Assembly

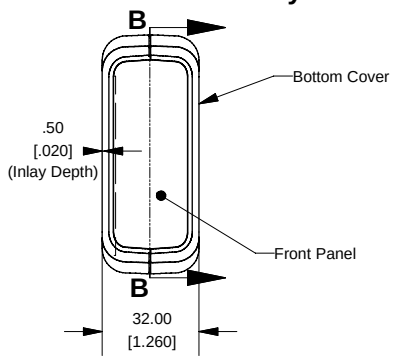

Front Panel

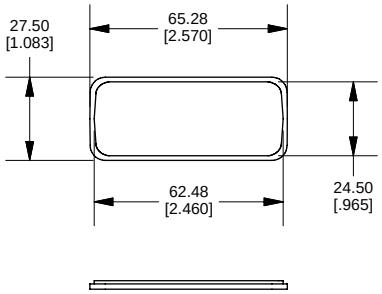

SECTION A-A
(Side View Inside Assembly)

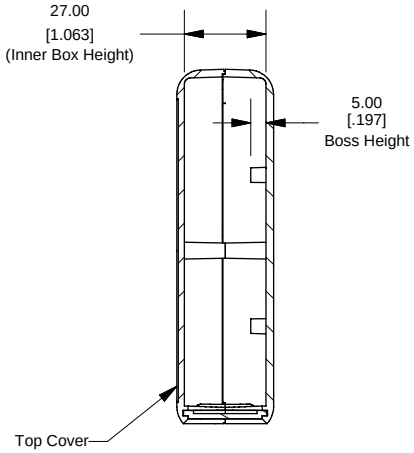

SECTION B-B
(Inside of Bottom Cover)

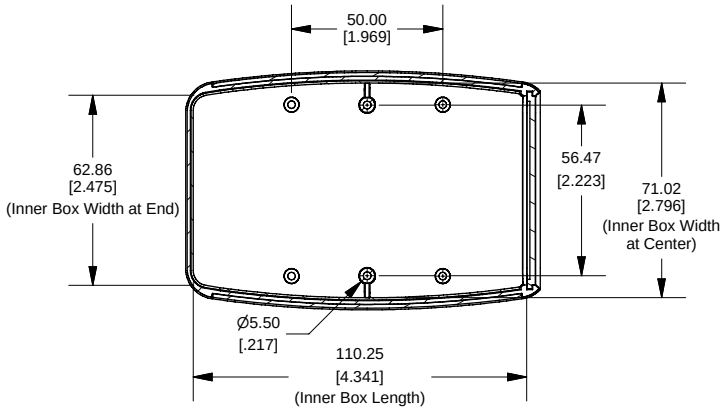

Maximum PCB Size

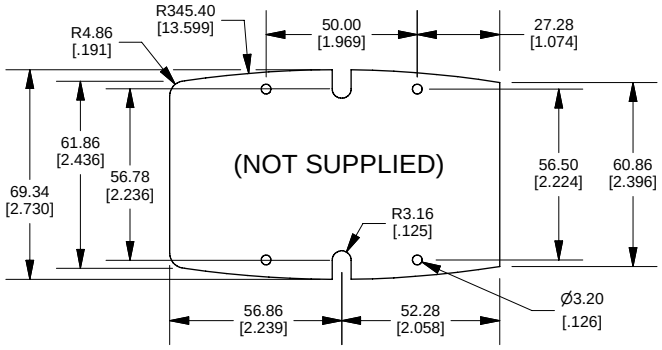



NOTE
Enclosure molded from GP ABS plastic.
Purchased assembly includes top and bottom cover, front plastic panel and 2 cover screws.

PART NUMBERS	
1553C Enclosure	
Black Enclosure/Grey Over-mold	1553CBK
Grey Enclosure/Grey Over-mold	1553CGY
ACCESSORIES	
P.C. Board Screws	1593ATS50 (Pkg 50) 1593ATS100 (Pkg 100)
Belt or Pocket Clip	1599CLIP (Black) 1599CLIPGY (Grey)

HAMMOND MANUFACTURING™

1553C

www.hammondmfg.com