X20(c)BB57

Data sheet
1.24 (February 2025)



Translation of the original documentation

Publishing information

B&R Industrial Automation GmbH

B&R Strasse 1

5142 Eggelsberg

Austria

Telephone: +43 7748 6586-0

Fax: +43 7748 6586-26

office@br-automation.com

Disclaimer

All information in this document is current as of its creation. The contents of this document are subject to change without notice. B&R Industrial Automation GmbH assumes unlimited liability in particular for technical or editorial errors in this document only (i) in the event of gross negligence or (ii) for culpably inflicted personal injury. Beyond that, liability is excluded to the extent permitted by law. Liability in cases in which the law stipulates mandatory unlimited liability (such as product liability) remains unaffected. Liability for indirect damage, consequential damage, business interruption, loss of profit or loss of information and data is excluded, in particular for damage that is directly or indirectly attributable to the delivery, performance and use of this material.

B&R Industrial Automation GmbH notes that the software and hardware designations and brand names of the respective companies used in this document are subject to general trademark, brand or patent protection.

Hardware and software from third-party suppliers referenced in this document is subject exclusively to the respective terms of use of these third-party providers. B&R Industrial Automation GmbH assumes no liability in this regard. Any recommendations made by B&R Industrial Automation GmbH are not contractual content, but merely non-binding information for which no liability is assumed. When using hardware and software from third-party suppliers, the relevant user documentation of these third-party suppliers must additionally be consulted and, in particular, the safety guidelines and technical specifications contained therein must be observed. The compatibility of the products from B&R Industrial Automation GmbH described in this document with hardware and software from third-party suppliers is not contractual content unless this has been separately agreed in individual cases; in this respect, warranty for such compatibility is excluded in any case, and it is the sole responsibility of the customer to verify this compatibility in advance.

Version history

B&R makes every effort to keep documents as current as possible. The most current versions are available for download on the B&R website (www.br-automation.com).

1 General information

1.1 Other applicable documents

For additional and supplementary information, see the following documents.

Other applicable documents

Document name	Title
MAX20	X20 System user's manual

1.2 Coated modules

Coated modules are X20 modules with a protective coating for the electronics component. This coating protects X20c modules from condensation and corrosive gases.
The modules' electronics are fully compatible with the corresponding X20 modules.

For simplification purposes, only images and module IDs of uncoated modules are used in this data sheet.

The coating has been certified according to the following standards:

- Condensation: BMW GS 95011-4, 2x 1 cycle
- Corrosive gas: EN 60068-2-60, method 4, exposure 21 days



1.3 Order data

Order number	Short description	Figure
	System modules for Compact-S PLCs	
X20BB57	X20 Compact-S bus base, for Compact-S PLC and Compact-S PLC power supply module, base for integrated RS232 and CAN bus interface, X20 connection, X20 end cover plates (left and right) X20AC0SL1/X20AC0SR1 included	
X20cBB57	X20c Compact-S bus base, coated, for Compact-S PLC and Compact-S PLC power supply module, base for integrated RS232 and CAN bus interface, X20 connection, X20 end cover plates (left and right) X20AC0SL1/X20AC0SR1 included	

Table 1: X20BB57, X20cBB57 - Order data

1.4 Module description

The bus module is the base for all X20 Compact-S controllers.

The left and right end cover plates are included in delivery.

- Base for all X20 Compact-S controllers
- RS232 connection
- CAN bus connection
- Integrated terminating resistor for CAN bus

2 Technical description

2.1 Technical data

Order number	X20BB57	X20cBB57
Short description		
Bus module	X20 Compact-S PLC base - backplane for Compact-S PLC and Compact-S PLC power supply module	
Interfaces	1x RS232 connection, 1x CAN bus connection	
General information		
B&R ID code	0xEB09	0xA457
Power consumption		
Bus	0.55 W	
Internal I/O	-	
Additional power dissipation caused by actuators (resistive) [W]	-	
Certifications		
CE	Yes	
UKCA	Yes	
UL	cULus E115267 Industrial control equipment	
DNV	Temperature: **B** (0 to 55°C) Humidity: **B** (up to 100%) Vibration: **B** (4 g) EMC: **B** (bridge and open deck)	
CCS	Yes	-
LR	ENV1	
KR	Yes	
ABS	Yes	
BV	**EC33B** Temperature: 5 - 55°C Vibration: 4 g EMC: Bridge and open deck	
I/O power supply		
Nominal voltage	24 VDC	
Permissible contact load	10 A	
Electrical properties		
Electrical isolation	Bus, CAN bus and RS232 not isolated from each other	
Operating conditions		
Mounting orientation		
Horizontal	Yes	
Vertical	Yes	
Installation elevation above sea level		
0 to 2000 m	No limitation	
>2000 m	Reduction of ambient temperature by 0.5°C per 100 m	
Degree of protection per EN 60529	IP20	
Ambient conditions		
Temperature		
Operation		
Horizontal mounting orientation	-25 to 60°C	
Vertical mounting orientation	-25 to 50°C	
Derating	-	
Storage	-40 to 85°C	
Transport	-40 to 85°C	
Relative humidity		
Operation	5 to 95%, non-condensing	Up to 100%, condensing
Storage	5 to 95%, non-condensing	
Transport	5 to 95%, non-condensing	
Mechanical properties		
Note	Left and right X20 end cover plates included in delivery	
Pitch	$37.5^{+0.2}$ mm	

Table 2: X20BB57, X20cBB57 - Technical data

2.2 Voltage routing

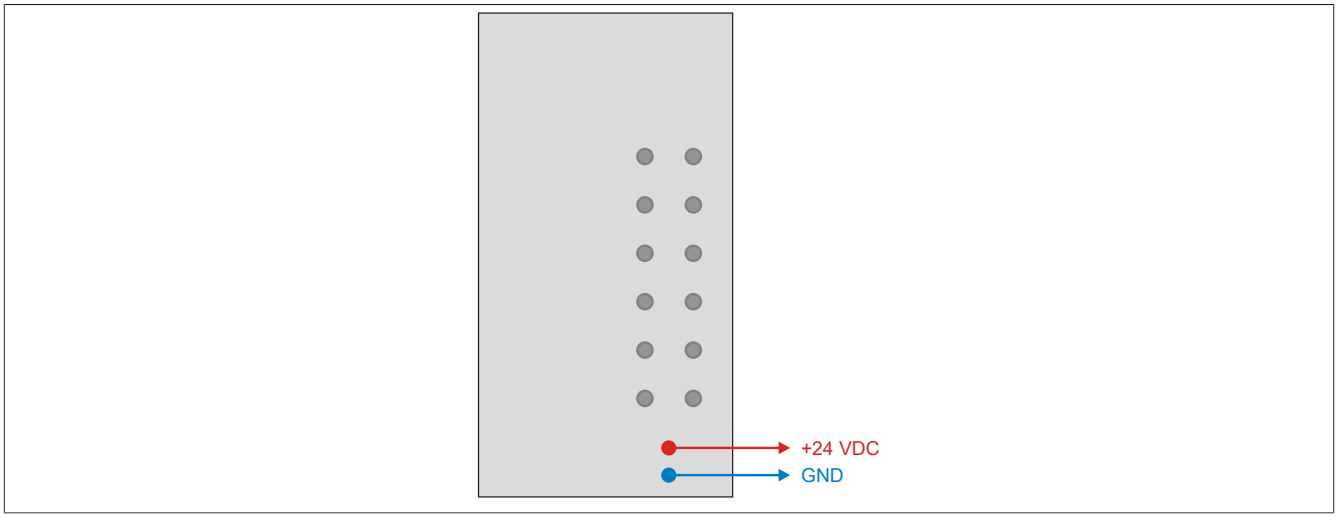

2.3 Terminating resistor for CAN bus

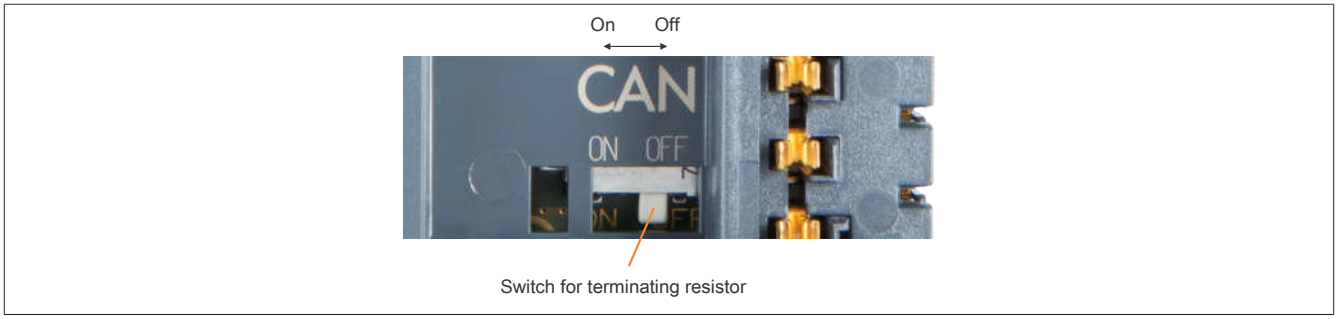

The bus module has an integrated CAN bus terminating resistor. The terminating resistor is switched on or off with a switch. An enabled terminating resistor is indicated on the power supply module by LED "T".