990.BF - AXIAL CUT BOLT CROPPERS | 990.BF0



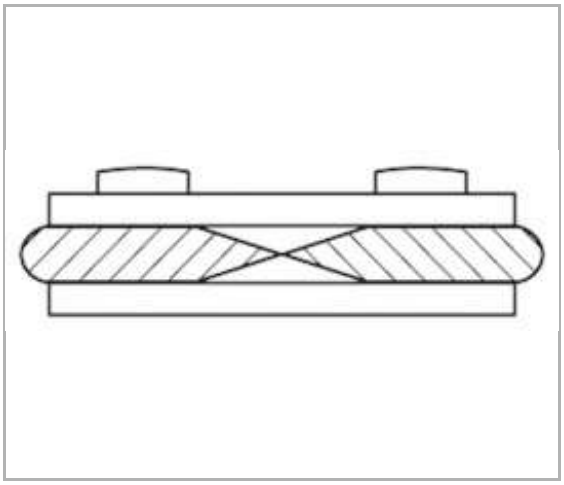

Description

- Forged arms = less cutting flexion.
- High performance chrome blades.
- Harder blades for a more durable cut.
- Eccentric screw adjustment of play between blades.
- Hand grip with guard for greater comfort.

Information

L ["]	18
L [mm]	450
[kg]	1,700

FACOM 2014 ©