EAO – Your Expert Partner for
Human Machine Interfaces

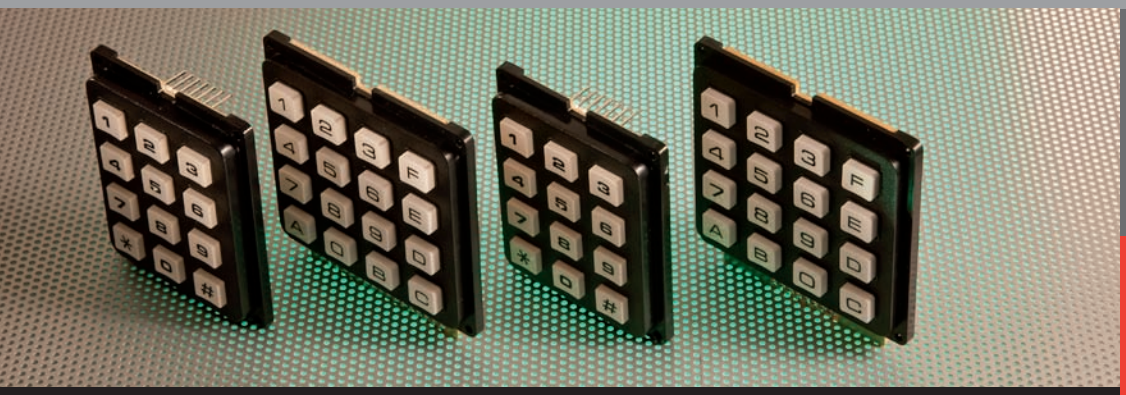

EAO Product Information

ECO


1
4
2
7
5
3
*
8
6
0
9
#
1
4
2
7
5
3
A
8
6
F
0
9
E
B
D
C

Description **3**

Keypads **4**

Technical Data **5**

Drawings **6**

Index **7**

Product Information

General notes
The EAO ECO keypads are suited to all indoor applications including data-entry systems, remote controls, telephone, point of sales terminals or alarm systems.
The ECO range of low-cost, flush-mount keypads are rugged, economical devices available in 12-key telephone style and 16-key hexadecimal II layouts.

Mounting
Mounting is from the back of a panel using fixed studs.
Protection degree of the keypad is IP 40 (front side).

Contacts
To ensure integrity of contacts and lower switch ratings, the contacts are gilded and external connection to the keypad is by means of a pin header on the back.
The electrical keypad circuit can be supplied in a choice of either matrix or common point configuration.

Keys
The keys are made of polycarbonate.

Marking
Standard markings are hot stamped. On request customized symbols and markings are available.

We reserve the right to modify technical data
All dimensions in mm

Keypad





	Front protection	Terminals	Key cap	No. of keys	Marking	Circuit	⌗ 60 x 57 Typ-Nr.	⌗ 46 x 57 Typ-Nr.	Component layout	Technical drawing	kg
Keypad Keys for indoor use	IP 40	PH	Plastic white	16	Hexadecimal II	P	**ECO.16200.06**		2	2	0.024
						M	**ECO.16250.06**		2	2	0.024
				12	Telephone	P		**ECO.12100.06**	1	1	0.020
						M		**ECO.12150.06**	1	1	0.020

Packaging of 10 pcs.
Terminals: PH = Pin header
Circuit: P = Common point, M = Matrix
Component layout from page 6, Technical drawing from page 6

Keypad

Material

Keys
Polycarbonate (PC)

Housing
Polycarbonate (PC)

Contacts
Carbon/Gold

Mechanical characteristics

Actuating force
1.2 N ±35 %

Actuating travel
1.4 mm ±0.1 N

Rebound time
≤2 ms

Marking height
3.5 mm

Electrical characteristics

Operating voltage/-current
Nominal 24 V, 20 mA
Maximum voltage 24 V
Minimum voltage 500 mV
Minimum current 10 mA

Contact resistance
<200 Ω of electric circuit

Isolation resistance
>1000 MΩ at 100 VDC

Life time
>1 Million cycles operation per key at nominal break rating

Switch rating
0.5 W

ESD-protection
5 kV

Environmental conditions

Storage temperature
-40 °C ... +65 °C

Operating temperature
-20 °C ... +60 °C

Approvals

Declaration of conformity
CE

Component layout

1 Keypad page 4

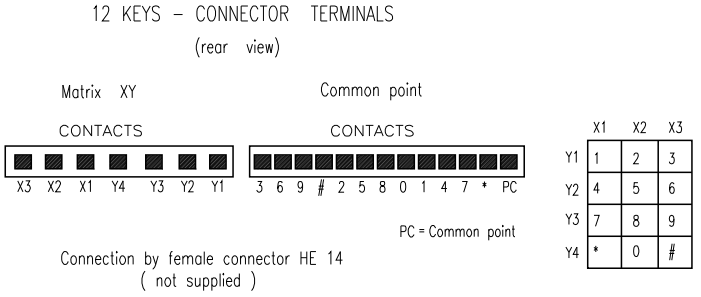

2 Keypad page 4

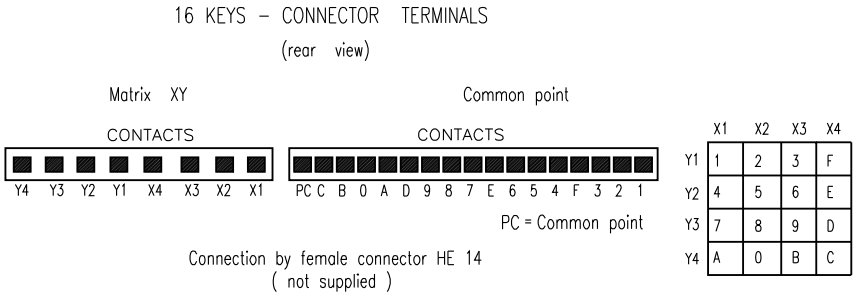

Technical drawing

1 Keypad page 4

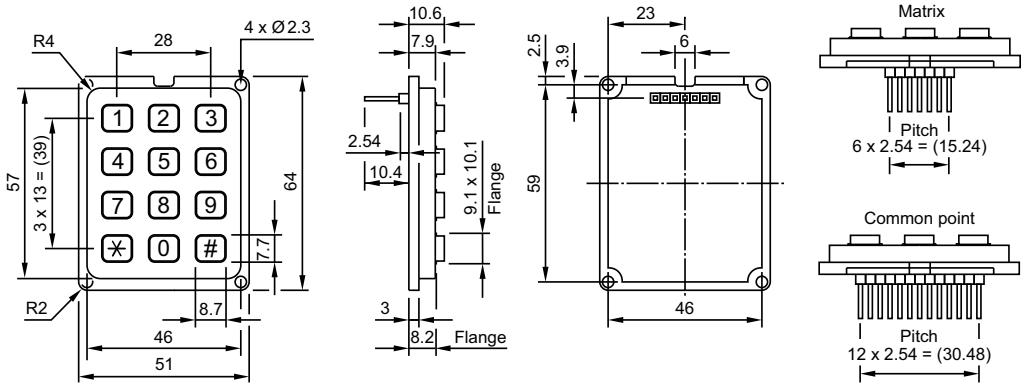

2 Keypad page 4

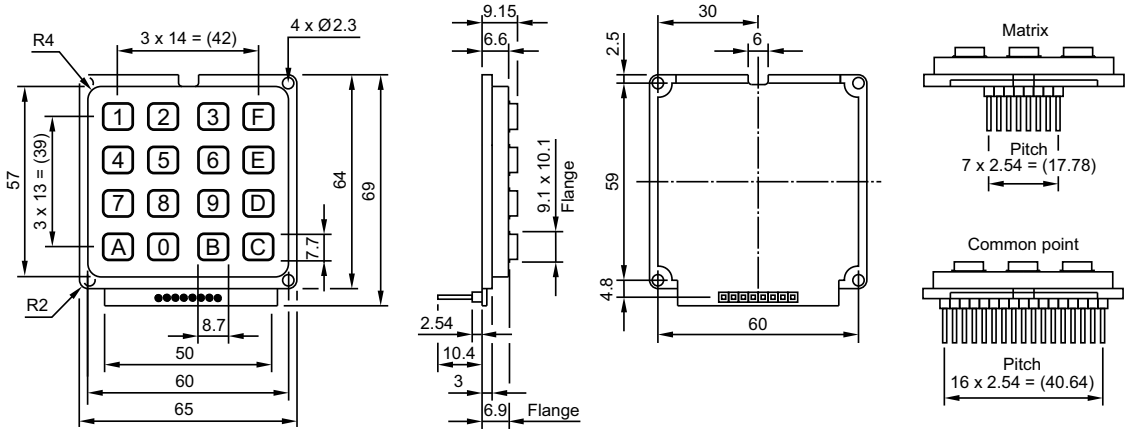

Index from Typ-Nr.

Typ-Nr.	Page	Typ-Nr.	Page	Typ-Nr.	Page
ECO.12100.06	4				
ECO.12150.06	4				
ECO.16200.06	4				
ECO.16250.06	4				

EAO AG
Tannwaldstrasse 88
4601 Olten, Switzerland

E-mail info@eao.com
Website www.eao.com

Austria
Phone +49 201 85 87 0
Fax +49 201 85 87 210
E-mail sales.ede@eao.com

Belgium
Phone +32 3 777 82 36
Fax +32 3 777 84 19
E-mail sales.ebl@eao.com

China
Phone +852 27 86 91 41
Fax +852 27 86 95 61
E-mail sales.ehk@eao.com

France
Phone +33 1 64 43 37 37
Fax +33 1 64 43 37 49
E-mail sales.ese@eao.com

Germany
Phone +49 201 85 87 0
Fax +49 201 85 87 210
E-mail sales.ede@eao.com

Italy
Phone +39 035 481 0189
Fax +39 035 481 3786
E-mail sales.eit@eao.com

Japan
Phone +81 3 5444 5411
Fax +81 3 5444 0345
E-mail sales.esj@eao.com

Netherlands
Phone +31 78 653 17 00
Fax +31 78 653 17 99
E-mail sales.enl@eao.com

Sweden
Phone +46 8 683 86 60
Fax +46 8 724 29 12
E-mail sales.esw@eao.com

Switzerland
Phone +41 62 388 95 00
Fax +41 62 388 95 55
E-mail sales.ech@eao.com

United Kingdom
Phone +44 1444 236 000
Fax +44 1444 236 641
E-mail sales.euk@eao.com

USA
Phone +1 203 877 4577
Fax +1 203 877 3694
E-mail sales.eus@eao.com

Other Countries
Phone +41 62 286 92 10
Fax +41 62 296 21 62
E-mail info@eao.com

EAO reserves the right to alter specifications without further notice

eao