Brand of NTN corporation

Technical data

ESPAE207

Bearing units

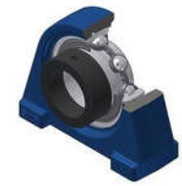

Grey cast housing, radial insert ball bearing with eccentric locking collar, single lip seal

KIT CONTENT

ES207G2, PAE207

VISUAL (S)

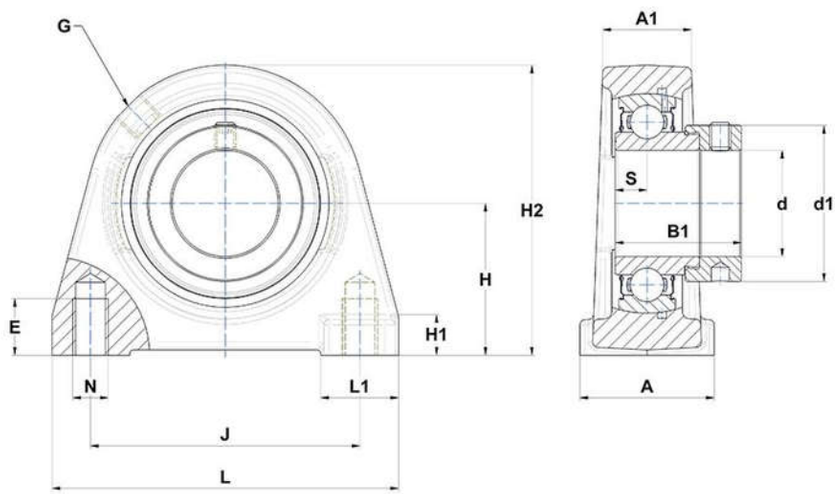

PRODUCT DEFINITION

Brand	SNR
A - Housing width	45 mm
A1 - Housing top width	27 mm
B - Width of Inner Ring	25,4 mm
d - Shaft diameter	35 mm
d1 - Outer dia of eccent. Lock. collar / nut of adapter sleeve	51,1 mm

NTN Europe
1 rue des Usines · BP 2017 · 74010 Annecy Cedex · France · Tel. +33 (0)4 50 65 30 00
S.A. au capital de 322 639 919 € · RCS ANNECY B 325 821 072 · Id. Fiscale : FR 48 325 821 072
SIRET 325 821 072 00015 · Code APE 2815 Z · Code NACE 28.15

PRODUCT DEFINITION	
E - Mounting hole thread depth	12,5 mm
G - Grease fitting	R1/8"
H - Distance mounting base to centerline spheric. seating diam.	47,6 mm
H1 - Housing foot height	12 mm
H2 - Housing height	93 mm
J - Mounting holes distance	82,6 mm
L - Housing length	103 mm
L1 - Housing foot length	22,5 mm
N - Mounting hole dimension	M10
S - Distance front side/bearing centre	9,5 mm

PRODUCT PERFORMANCE	
C - Dynamic load rating	25700000 mN
C0 - Static load rating	15200000 mN
Operating temperature min.	253,15 °K
Operating temperature max.	373,15 °K

OTHER FEATURES	
Mass	1,4 kg
Recommended tightening torque for set screw	11.5 N-m