Compact cylinder, Series KPZ

0822398006

AVENTICS Series KPZ Compact cylinders

The AVENTICS Series KPZ is a compact cylinders based on the widely used standard NFE 49 004. It offer a wide variety of variants and are suitable for a multitude of applications thanks to their sizing.





Technical data

Industry	Industrial
Standards	NFE 49004
Piston Ø	100 mm
Stroke	40 mm
Ports	G 1/8
Functional principle	Double-acting
Cushioning	Elastic cushioning
Magnetic piston	Piston with magnet
Environmental requirements	Industry standard ATEX optional
Piston rod thread - type	Internal thread
Piston rod thread	M16
Piston rod	single
Scraper	Standard Industry Scraper
Pressure for determining piston forces	6,3 bar
Retracting piston force	4639 N
Extracting piston force	4948 N
Min. ambient temperature	-20 °C
Max. ambient temperature	80 °C
Min. working pressure	0.6 bar

Max. working pressure	10 bar
Stroke max.	500 mm
Medium	Compressed air
Min. medium temperature	-20 °C
Max. medium temperature	80 °C
Max. particle size	50 µm
Min. oil content of compressed air	0 mg/m³
Max. oil content of compressed air	5 mg/m³

Material

Piston rod	Stainless Steel
Scraper material	Polyurethane
Seal material	Polyurethane
Material, front cover	Aluminum
Cylinder tube	Aluminum
End cover	Aluminum
Part No.	0822398006

Technical information

ATEX-certified cylinders with identification II 2G Ex h IIC T4 Gb / II 2D Ex h IIIC T135°C Db_X can be generated in the Internet configurator.

The operating temperature range for ATEX-certified cylinders is -20°C ... 60°C.

The material for heat-resistant scraper and seal variants (ambient temperature: -10 °C ... 120 °C) is fluorocaoutchouc.

Further options can be generated in the Internet configurator.

The pressure dew point must be at least 15 °C less than ambient and medium temperature and may not exceed 3 °C.

The oil content of compressed air must remain constant during the life cycle.

Use only the approved oils from AVENTICS. Further information can be found in the “Technical information” document (available in https://www.emerson.com/en-us/support).

Dimensions

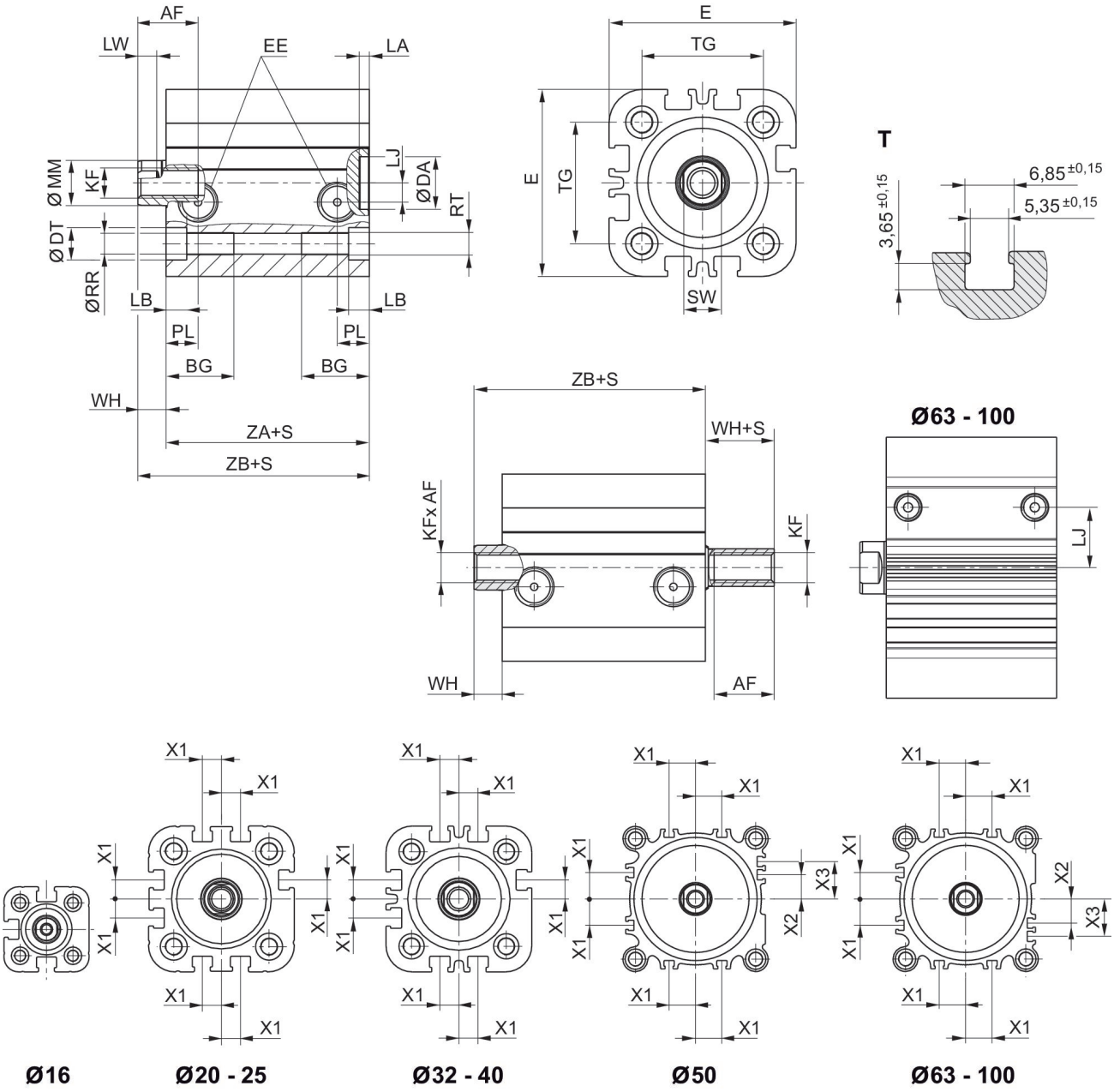

S = stroke
T = View for sensor groove

Maximum admissible lateral force dynamic

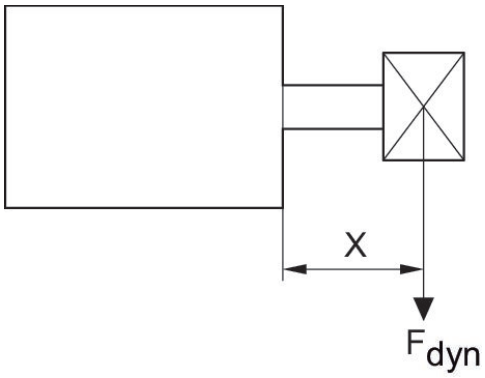

F dyn. = dynamic lateral force
X = distance between force application point and cylinder cover
S = stroke

Maximum admissible lateral force dynamic

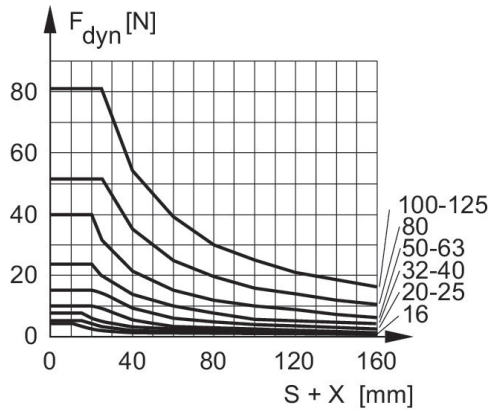

F dyn. = dynamic lateral force
X = distance between force application point and cylinder cover
S = stroke

Maximum admissible lateral force static

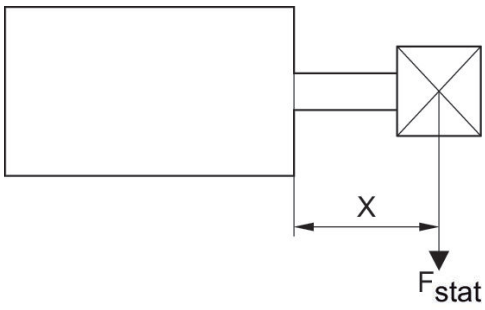

F stat. = static lateral force
X = distance between force application point and cylinder cover

Maximum admissible lateral force static

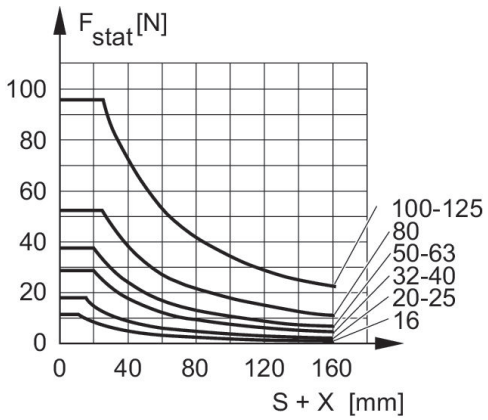

F stat. = static lateral force
X = distance between force application point and cylinder cover
S = stroke

Overview drawing

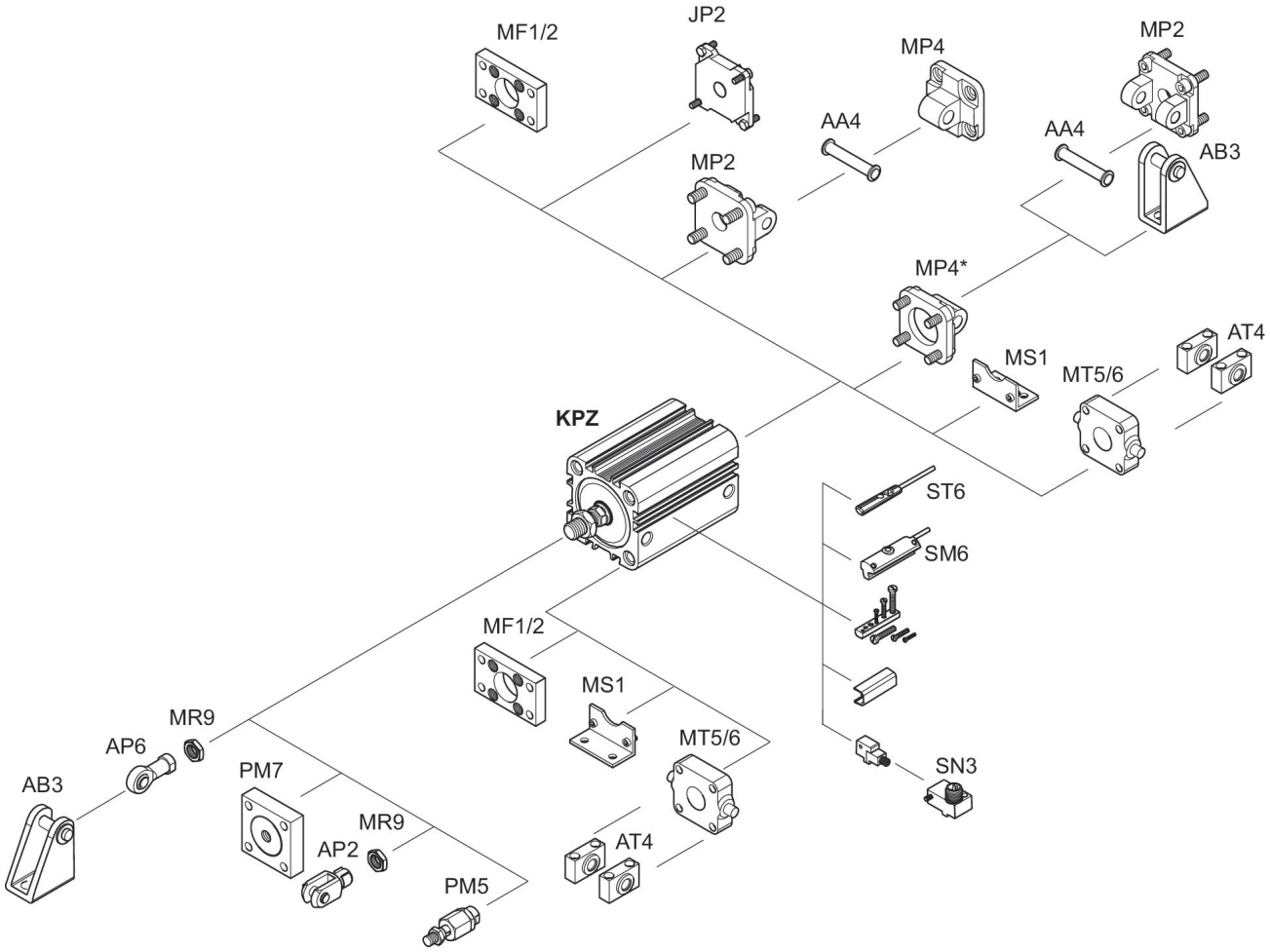

* Available for installation on KPZ for cylinder diameters 16 - 25 mm

NOTE: This overview drawing is only for orientation to indicate where the various accessory parts can be fastened to the cylinder. The illustration has been simplified for this purpose. It is thus not possible to derive the dimensions from this overview.

Piston Ø	AF min. Option: through piston rod	BG min.	DA H11	DT H13	E	EE	KF	LA	LB
16	10	14.5	10	6	29.5	M5	M4	2.5	3.5
20	12 10: S<3 mm 2)	15.5	12	7.5	36	M5	M6	2.5	4.5
25	12 10: S<3 mm 2)	15.5	12	8	40	M5	M6	2.5	4.4
32	12	18	14	8.6	50	G 1/8	M8	2.5	5.5
40	12	18	14	9	58	G 1/8	M8	2.5	5.5
50	16 12: S<4 mm 2)	24	18	11	68	G 1/8	M10	2.5	2
63	16 12: S<4 mm 2)	24	18	11	80	G 1/8	M10	2.5	2
80	20 15: S<5 mm 2)	28	23	14	99	G 1/8	M12	3	1
100	26 21: S<5 mm 2)	27.5	28	15	120	G 1/8	M16	3	3.5

Piston Ø	LJ	LW	MM f8	PL	Ø RR	RT	SW	TG	WH
16	2.5	2.8	8	7.5	3.3	M4	7	18 ±0,4	4.5
20	4.5	3.7	10	7.5	4.2	M5	8	22 ±0,4	5
25	5	3.7	10	7.5	4.2	M5	8	26 ±0,4	5.5
32	5.1	5	12	8.5	5.1	M6	10	32 ±0,5	7
40	9.6	5	12	8.5	5.1	M6	10	42 ±0,5	7
50	8.5	4.8	16	8.5	6.7	M8	13	50 ±0,6	7.5
63	17.8	4.8	16	8.5	6.7	M8	13	62 ±0,7	8
80	22.9	6.4	20	8.3	8.5	M10	16	82 ±0,7	9.5
100	26.5	6.4	25	9.7	8.5	M10	21	103 ±0,7	10.5

Piston Ø	X1	X2	X3	ZA + Stroke	ZB + Stroke
16	–	–	–	38	42,5 0/+1,4
20	4.2	–	–	38	43 0/+1,4
25	4.5	–	–	39	44,5 0/+1,4
32	6.5	–	–	44	51 0/+1,6
40	11	–	–	45	52 0/+1,6
50	13	4	13	45.5	53 0/+1,6
63	18	12	21	49	57 0/+2
80	18	16.5	25.5	54.5	64 0/+2
100	20	20	29	66.5	77 0/+2