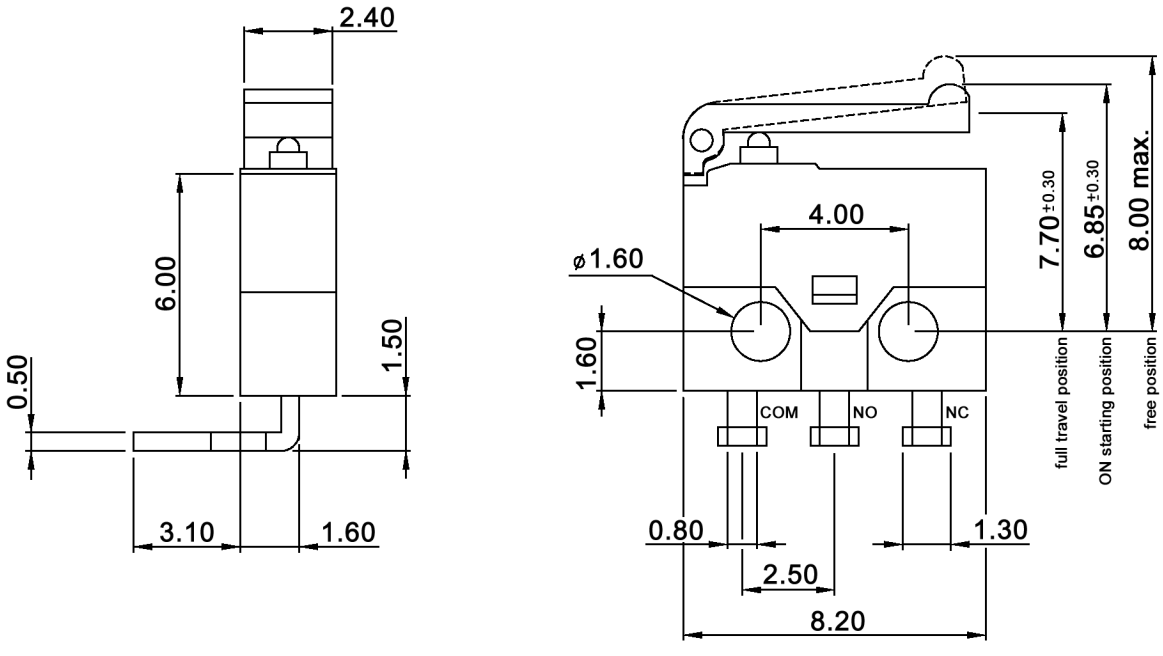

Specifications:

Contact rating:	500mA, 30V DC
Contact resistance:	100mOhm max.
Insulation resistance:	100MOhm min. at 500V DC
Dielectric strength:	250V AC for 1 minute
Operating temperature:	-20°C to +70°C
Mechanical life:	300 000 cycles min.
Operating force:	50gf max.
Soldering conditions:	260 +/-5°C, 3sec. max.
Material:	Cover / plunger: POM, UL94HB
	Body / lever: PBT, UL94V-0
	Contact: BeCu with silver plated
	Terminals: brass, silver plated

Compliance: RohS II (2011/65/EU)

Tolerances: 0.00 to 30.00: ±0.20mm 30.01 to 80.00: ±0.25mm			Date	Name
			11/05	dr
Travel	08/14	dr		
Rename	07/13	dr		
Material	12/12	dr		
Revised	03/10	dr		
Modifications	Date	Name		

DM-SSM-01C-L2

knitter-switch

30 07 27

Page 1/1