DATASHEET - M22-CK11



Contact element, Cage Clamp, Front fixing, 1 N/O, 1 NC, 24 V 3 A, 220 V 230 V 240 V 4 A

Powering Business Worldwide

Part no.	**M22-CK11**
Catalog No.	**107940**
Alternate Catalog No.	**M22-CK11Q**
EL-Nummer (Norway)	**4355492**

Delivery program

Product range			Accessories
Basic function accessories			Contact elements
Accessories			Auxiliary contact
Accessories			Standard auxiliary contact, trip-indicating auxiliary switch
Standard/Approval			UL/CSA, IEC
Construction size			NZM1/2/3/4
Description			When using emergency switching off actuators M22-PV… max. 2 contact elements = 4 NC / N/O contacts Cage Clamp is a registered trademark of Wago Kontakttechnik GmbH/Minden, Germany
Connection technique			Cage Clamp
Fixing			Front fixing
Degree of Protection			IP20
Connection to SmartWire-DT			no
For use with			NZM1(-4), 2(-4), 3(-4), 4(-4) PN1(-4), 2(-4), 3(-4) N(S)1(-4), 2(-4), 3(-4), 4(-4)
Approval			DGUV Test ET 16107 Sicherheit geprüft tested safety

Contacts

N/O = Normally open			1 N/O
N/C = Normally closed			1 NC
Notes			= safety function, by positive opening to IEC/EN 60947-5-1

Actuator travel and actuation force as per DIN EN 60947-5-1, K.5.4.1

		mm	4.8
Maximum travel		mm	5.7
Minimum force for positive opening		N	20
Contact sequence			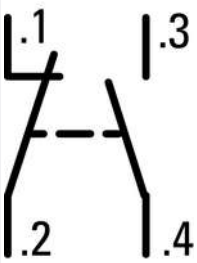

Contact travel diagram, stroke in connection with front element

Contact diagram			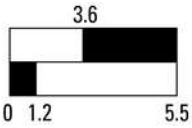
Connection type			Double contact
Description of HIA trip-indicating auxiliary contact			General trip indication '+', when tripped by shunt release, overload release, short-circuit release or by the residual-current release due to residual-current. Can be used with NZM1, 2, 3 circuit-breaker: a trip-indicating auxiliary contact can be clipped into the circuit-breaker. Can be used with NZM4 circuit-breaker: up to two standard auxiliary contacts can be clipped into the circuit-breaker. Any combinations of the auxiliary contact types are possible. Not in combination with switch-disconnector PN… Marking on switch: HIA Labeling in FI-Block: HIAFI. If the trip-indicating auxiliary switch in the fault current block is used, the NC contacts operates as a N/O contact and the NC contact operates as an N/O contact.
Description standard auxiliary contact HIN			Switching with the main contacts Used for indicating and interlocking tasks. Can be used with NZM1 circuit-breaker: a standard auxiliary contact can be clipped into the circuit-breaker. Can be used with NZM2 size circuit-breaker: a standard auxiliary contact can be clipped into the circuit-breaker. Can be used with NZM3, 4 circuit-breaker: up to three standard auxiliary contacts can be clipped into the circuit-breaker. Any combinations of the auxiliary contact types are possible. Marking on switch: HIN. On combination with remote operator NZM-XR... the right mounting location of standard auxiliary contact HIN can be fitted only with individual contacts.
Connection technique			Cage Clamp

Notes

The following can be clipped into the switches:

- NZM1: a standard auxiliary contact
- NZM2: up to two M22-(C)K… standard auxiliary contacts
- NZM3: up to three M22-(C)K… standard auxiliary contacts
- NZM4: up to three M22-(C)K… standard auxiliary contacts

Any combinations of the auxiliary contact types are possible.

Marking on switch: HIN

In combination with remote operator NZM-XR… only single contacts can be fitted to some installation locations of the standard auxiliary contact.

NZM2: Only single contact can be fitted in left installation location of standard auxiliary contact.

NZM3: Only single contact can be fitted in installation locations of standard auxiliary contact.

NZM4: Only single contact can be fitted in right installation location of standard auxiliary contact.

Technical data

General

Standards			IEC 60947-5-1
Operating frequency	Operations/h		≦ 3600
Actuating force		n	≦ 10
Degree of Protection			IP20
Climatic proofing			Damp heat, constant, to IEC 60068-2-78 Damp heat, cyclic, to IEC 60068-2-30
Ambient temperature			
Open		°C	-25 - +70
Terminal capacities		mm^2	
Solid		mm^2	0.5 - 1.5
Stranded		mm^2	0.5 - 1.5
Flexible with ferrule		mm^2	0.5 - 1.5

Contacts

Rated impulse withstand voltage	U_{imp}	V AC	4000
Rated insulation voltage	U_i	V	250
Overvoltage category/pollution degree			III/3
Control circuit reliability			

at 24 V DC/5 mA	H_F	Fault probability	$< 10^{-7}$ (i.e. 1 failure to 10^7 operations)
at 5 V DC/1 mA	H_F	Fault probability	$< 5 \times 10^{-6}$ (i.e. 1 failure in 5×10^6 operations)
Max. short-circuit protective device			
Fuseless		Type	PKZM0-10/FAZ-B6/1
Fuse	gG/gL	A	10

Switching capacity

Rated operational current	I_e	A	
AC-15			
115 V	I_e	A	4
220 V 230 V 240 V	I_e	A	4
DC-13			
24 V	I_e	A	3
42 V	I_e	A	1
60 V	I_e	A	0.8
110 V	I_e	A	0.5
220 V	I_e	A	0.3

Auxiliary contacts

Rated operational voltage	U_e	V	
Rated operational voltage	Ue	V AC	230
Rated operational voltage, max.	Ue	V DC	220
Conventional thermal current	$I_{th} = I_e$	CSA	4
Rated operational current	I_e	A	

Different rated operational currents when used as auxiliary contact for NZM circuit-breaker

					M22-(C)K10(01)	M22-CK11(02)(20)	XHIV
			bei AC = 50/60 Hz				
Bemessungsbetriebsstrom							
AC-15	115 V	Ie	A		4	4	4
	230 V	Ie	A		4	4	4
	400 V	Ie	A		2	-	2
	500 V	Ie	A		1	-	1
DC-13	24 V	Ie	A		3	3	3
	42 V	Ie	A		1.7	1	1.5
	60 V	Ie	A		1.2	0.8	0.8
	110 V	Ie	A		0.6	0.5	0.5
	220 V	Ie	A		0.3	0.2	0.2

Rated conditional short-circuit current	I_q	kA	1
Short-circuit protection			
max. fuse		A gG/gL	10
Max. miniature circuit-breaker		A	FAZ-B6/B1
Operating times			
			Early-make time of the HIV compared to the main contacts during with make and break switching. (switch times with manual operation): NZM1, PN1, N(S)1: ca. 20 ms NZM2, PN2, N(S)2: ca. 20 ms NZM3, PN3, N(S)3: ca. 20 ms NZM4, N(S)4: approx. 90 ms, the HIV switch early **Off**switching **not** forward.
Terminal capacities		mm^2	
Solid or flexible conductor, with ferrule		mm^2	1 x (0,5 - 1,5) 2 x (0,5 - 0,75)
		AWG	1 x (20 - 18) 2 x (20 - 18)
Other technical data (sheet catalogue)			Maximum equipment and position of the internal accessories

Design verification as per IEC/EN 61439

Technical data for design verification			
Rated operational current for specified heat dissipation	I_n	A	4
Heat dissipation per pole, current-dependent	P_{vid}	W	0.05
Equipment heat dissipation, current-dependent	P_{vid}	W	0
Static heat dissipation, non-current-dependent	P_{vs}	W	0
Heat dissipation capacity	P_{diss}	W	0
Operating ambient temperature min.		°C	-25
Operating ambient temperature max.		°C	70
IEC/EN 61439 design verification			
10.2 Strength of materials and parts			
10.2.2 Corrosion resistance			Meets the product standard's requirements.
10.2.3.1 Verification of thermal stability of enclosures			Meets the product standard's requirements.
10.2.3.2 Verification of resistance of insulating materials to normal heat			Meets the product standard's requirements.
10.2.3.3 Verification of resistance of insulating materials to abnormal heat and fire due to internal electric effects			Meets the product standard's requirements.
10.2.4 Resistance to ultra-violet (UV) radiation			Meets the product standard's requirements.
10.2.5 Lifting			Does not apply, since the entire switchgear needs to be evaluated.
10.2.6 Mechanical impact			Does not apply, since the entire switchgear needs to be evaluated.
10.2.7 Inscriptions			Meets the product standard's requirements.
10.3 Degree of protection of ASSEMBLIES			Does not apply, since the entire switchgear needs to be evaluated.
10.4 Clearances and creepage distances			Meets the product standard's requirements.
10.5 Protection against electric shock			Does not apply, since the entire switchgear needs to be evaluated.
10.6 Incorporation of switching devices and components			Does not apply, since the entire switchgear needs to be evaluated.
10.7 Internal electrical circuits and connections			Is the panel builder's responsibility.
10.8 Connections for external conductors			Is the panel builder's responsibility.
10.9 Insulation properties			
10.9.2 Power-frequency electric strength			Is the panel builder's responsibility.
10.9.3 Impulse withstand voltage			Is the panel builder's responsibility.
10.9.4 Testing of enclosures made of insulating material			Is the panel builder's responsibility.
10.10 Temperature rise			The panel builder is responsible for the temperature rise calculation. Eaton will provide heat dissipation data for the devices.
10.11 Short-circuit rating			Is the panel builder's responsibility. The specifications for the switchgear must be observed.
10.12 Electromagnetic compatibility			Is the panel builder's responsibility. The specifications for the switchgear must be observed.
10.13 Mechanical function			The device meets the requirements, provided the information in the instruction leaflet (IL) is observed.

Technical data ETIM 7.0

Low-voltage industrial components (EG000017) / Auxiliary contact block (EC000041)			
Electric engineering, automation, process control engineering / Low-voltage switch technology / Component for low-voltage switching technology / Auxiliary switch block (ecl@ss10.0.1-27-37-13-02 [AKN342013])			
Number of contacts as change-over contact			0
Number of contacts as normally open contact			1
Number of contacts as normally closed contact			1
Number of fault-signal switches			0
Rated operation current Ie at AC-15, 230 V		A	6
Type of electric connection			Spring clamp connection
Model			Top mounting and integrable
Mounting method			Front fastening
Lamp holder			None

Approvals

Product Standards			IEC/EN 60947-5; UL 508; CSA-C22.2 No. 14-05; CSA-C22.2 No. 94-91; CE marking
UL File No.			E29184
UL Category Control No.			NKCR

CSA File No.			012528
CSA Class No.			3211-03
North America Certification			UL listed, CSA certified
Degree of Protection			UL/CSA Type: -

Dimensions

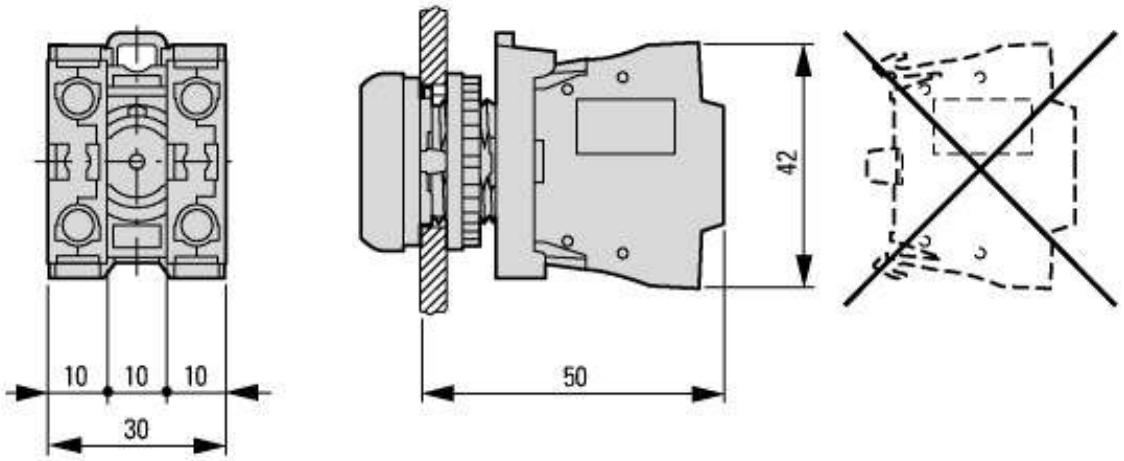

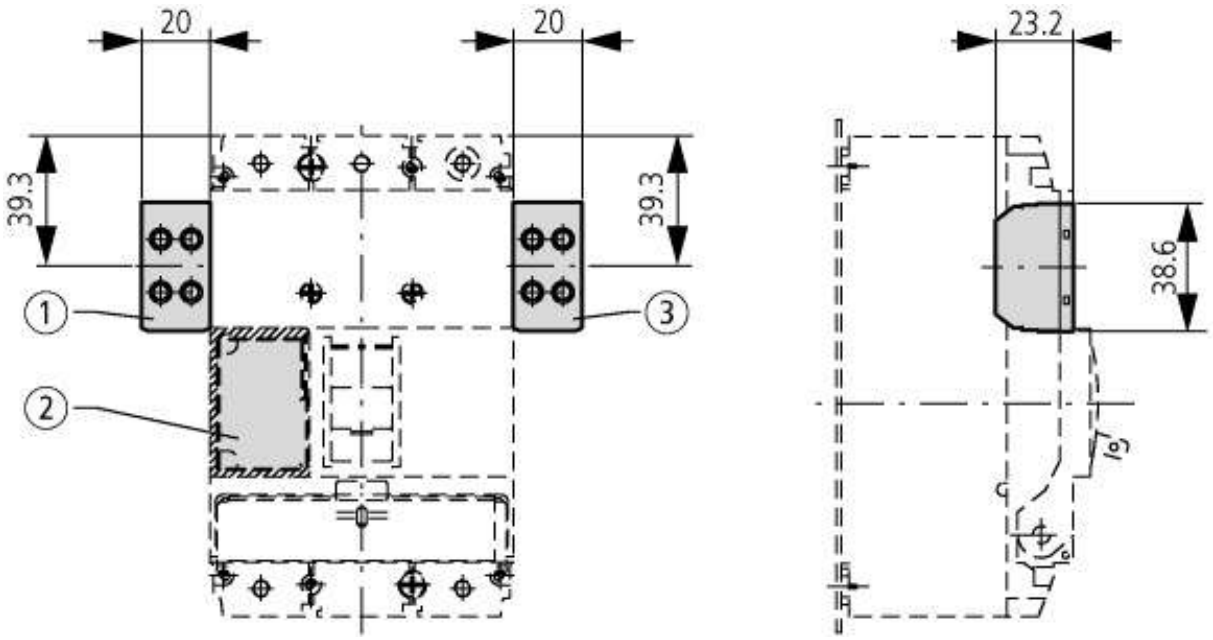

①
NZM1-XA(HIV)
NZM1-XA(HIV)(20)
NZM1-XHIV
②
NZM1-XA(HIV)(L)
NZM1-XU(V)(HIV)(L)(20)
NZM1-XHIV(L)
③
NZM1-XHIVR

Pushbutton with M22-(C)K…
Pushbutton with M22-(C) LED… + M22-XLED…

© 05/2021 by Eaton Industries GmbH