52003490	DATA SHEET	LAPP
Valid from: 18.01.2024	SKINDICHT® SM	

The SKINDICHT® SM is a nickel-plated brass locknut with PG-thread.
It is required wherever a gland must be secured or thin housing walls allow only through-holes.



Technical features:

Size	PG7 up to PG48, thread acc. to DIN 40430
Material	Brass, nickel plated Brass Lead Free, nickel plated
Temperature range	-60°C up to +200°C

Norm references:

CE

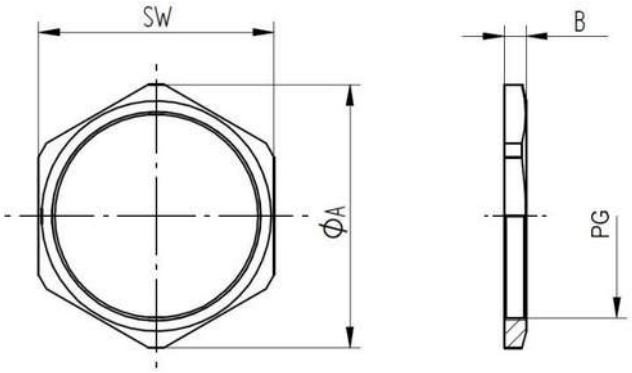

Thread PG	Wrench Size SW mm	Diameter Ø A mm	Thickness B mm	Article No.	
				Brass	Brass Lead Free
PG 7	15	16,6	2,8	52003490	52003490LF
PG 9	18	20,0	2,8	52003500	52003500LF
PG 11	21	23,5	3,0	52003510	52003510LF
PG 13,5	23	25,5	3,0	52003520	52003520LF
PG 16	26	29,0	3,0	52003530	52003530LF
PG 21	32	35,5	3,5	52003540	52003540LF
PG 29	41	45,0	4,0	52003550	52003550LF
PG 36	51	56,0	5,0	52003560	52003560LF
PG 42	60	65,0	5,0	52003570	52003570LF
PG 48	64	69,0	5,5	52003580	52003580LF

For more information please see our current catalogue. Please do not hesitate to contact our laboratory if there are any questions regarding resistance against aggressive agents and special oil.

We reserve all rights according to DIN ISO 16016.