E30398

MEMORY PLUG

Accessories

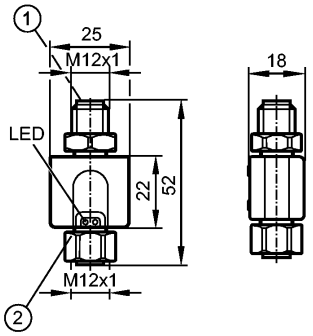

1: connection for voltage supply and output signals
2: connection for sensor

Made in USA

Product characteristics		
Memory plug		
Parameter memory for IO-Link sensors		
Storage capacity: 2 Kbytes		
Electrical data		
Electrical design		OUT1: DC PNP / OUT2: electrically connected
Operating voltage	[V]	18...32 DC
Current consumption	[mA]	< 35
Insulation resistance	[MΩ]	> 100 (500 V DC)
Protection class		III
Reverse polarity protection		yes
Outputs		
Output function		Function identical to connected sensor
Current rating	[mA]	500; / peak (50 ms) 2 A
Voltage drop	[V]	0.5
Short-circuit protection		depending on the sensor connected
Interfaces		
IO-Link master		
Transfer type		COM1 (4.8 kBaud), COM2 (38.4 kBaud)
IO-Link revision		1.1
SDCI standard		IEC 61131-9 (Draft)
Number of ports		1
Port type		A
Pin 2		electrically connected
IO-Link Device		
Transfer type		COM2 (38.4 kBaud)
IO-Link revision		1.1
Profiles		no profile
SIO mode		no
Required master port type		A
Process data analogue		-
Process data binary		-
Min. process cycle time	[ms]	2.5
Environment		

efectorsoo

E30398

MEMORY PLUG

Accessories

Ambient temperature	[°C]	-25...60
Storage temperature	[°C]	-40...85
Protection		IP 65 / IP 67

Tests / approvals

EMC		EN 61000-6-2
Shock resistance		DIN IEC 68-2-27: 50 g (11 ms)
Vibration resistance		DIN IEC 68-2-6: 20 g (10...2000 Hz)
MTTF	[Years]	655.69

Mechanical data

Housing materials		PA PACM 12 (TROGAMID); PET; sealing: FPM (Viton); nut: stainless steel 316L / 1.4404; connector: TPU
Switching cycles min.		
Weight	[kg]	0.116

Displays / operating elements

Display	Operation 2 x LED green

Electrical connection

Connection	2 x M12 connector

Wiring



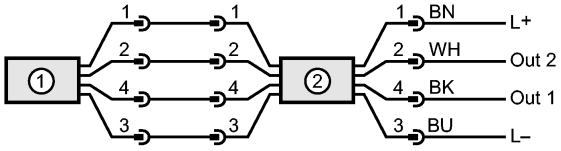

1: sensor
2: Memory plug

Remarks

Remarks	Only for positive switching sensors The memory plug acts as master if it is connected with a sensor. The memory plug acts as device if it is used with the FDT service program ifm Container. cULus - Class 2 source required
Pack quantity [piece]	1