TSM301

Passive surface temperature probe

TSM020K2PCXX/US/

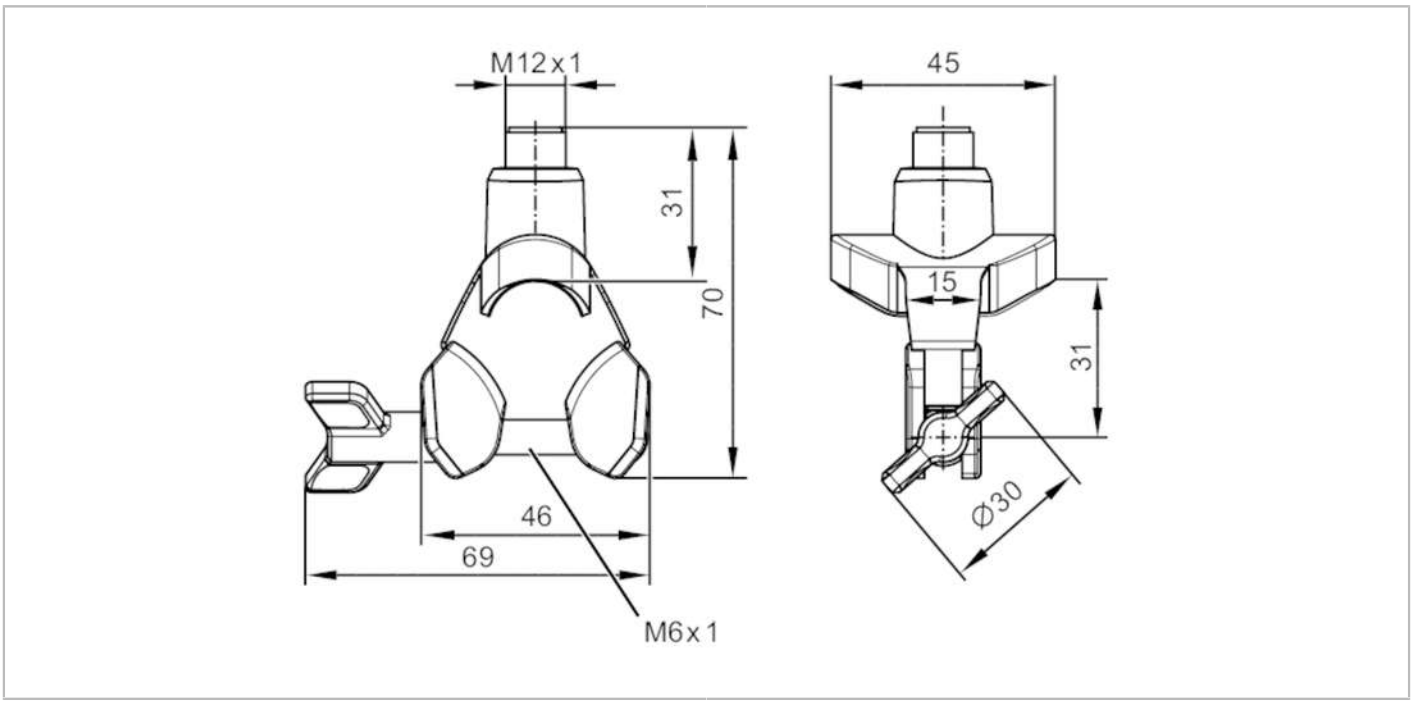

Product characteristics			
Measuring range		-25...160 °C	-13...320 °F
Process connection		bolt-on sensor DN20 (Ø 21...24 mm)	
Application			
Special feature		Gold-plated contacts	
Measuring element		1 x Pt 1000; (to DIN EN 60751, class A)	
Installation		Passive surface temperature probe for solid bodies; clamp-on solution	
Electrical data			
Protection class		III	
Measuring/setting range			
Measuring range		-25...160 °C	-13...320 °F
Accuracy / deviations			
Accuracy	[K]	± (0,15 K + 0,002 x|T|); (ambient temperature influence on the accuracy: 0,025 x (Ta - T))	
Response times			
Dynamic response T05 / T09	[s]	7,5 / 25; (reference values for moving water : (> 0,4 m/s))	
Operating conditions			
Ambient temperature	[°C]	-25...80	
Protection		IP 69K	
Tests / approvals			
MTTF	[years]	22831	
Mechanical data			
Weight	[g]	134.2	
Design		Surface temperature probe	
Dimensions	[mm]	70 x 69 x 45	
Materials		Mounting clamp: stainless steel (316L/1.4404); housing: PPSU; Gasket: FKM	
Process connection		bolt-on sensor DN20 (Ø 21...24 mm)	

TSM301

Passive surface temperature probe

TSM020K2PCXX/US/

Remarks	
Remarks	Ta = Ambient temperature
	T = Process temperature
Pack quantity	1 pcs.

Electrical connection

Connector: 1 x M12; coding: A; Contacts: gold-plated



Connection

