Brand of NTN corporation

Technical data



6308FT150ZZ

Single row deep groove ball bearings

TOPLINE deep groove ball bearing, radial contact, pressed steel cage, shields on both sides, applications up to 150°C.

TOPLINE

VISUAL (S)

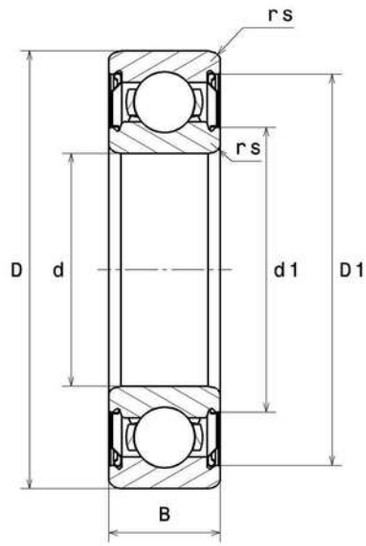

6308FT150ZZ

Single row deep groove ball bearings

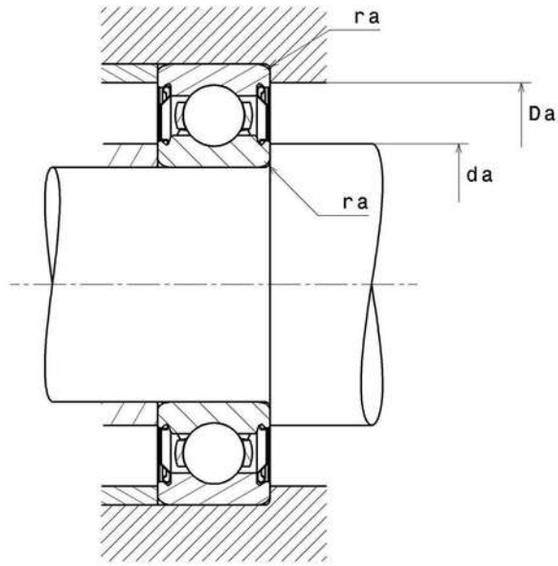

PRODUCT DEFINITION	
Brand	SNR
d - Internal diameter	40 mm
D - External diameter	90 mm
B - Bearing/Inner ring width	23 mm
d1 - External diameter inner ring	51,9 mm
D1 - Inner diameter outer ring	78,1 mm
rs - Min fillet radius	1,5 mm
Radial clearance class	C3
Mass	0,612 kg

PRODUCT PERFORMANCE	
C - Dynamic load	42900000 mN
C0 - Static load	24000000 mN
Cu - Fatigue limit load	1090000 mN

6308FT150ZZ
Single row deep groove ball bearings

PRODUCT PERFORMANCE	
f0 - Coefficient	13.2
N lim - Mechanical Limit Speed	45600 °/s
Tmin - Min operating temperature	243,15 °K
Tmax - Max operating temperature	423,15 °K

BEARING FREQUENCIES	
BPFO - Over rolling frequency on outer ring (60 rpm)	3.072 Hz
BPFI - Over rolling frequency on inner (60 rpm)	4.928 Hz
BSF - Over rolling frequency on rolling element (60 rpm)	4.078 Hz
BRF - Rotational frequency – rolling element (60 rpm)	2.039 Hz
FTF - Rotational frequency - cage (60 rpm)	0.384 Hz

ABUTMENT	
da min - Min shoulder diameter IR	48 mm
da max - Max shoulder diameter IR	51,9 mm
Da max - Max shoulder diameter OR	82 mm
ra max - Max shaft & housing fillet radius	1,5 mm

6308FT150ZZ
Single row deep groove ball bearings

INDUSTRY CALCUL FACTORS

Equivalent dynamic radial load

P = X.Fr + Y.Fa

$\frac{f_0 F_a}{C_0}$	e	Fa / Fr ≤ e		Fa / Fr > e	
		X	Y	X	Y
0.172	0.19	1	0	0.56	2.3
0.345	0.22				1.99
0.689	0.26				1.71
1.03	0.28				1.55
1.38	0.3				1.45
2.07	0.34				1.31
3.45	0.38				1.15
5.17	0.42				1.04
6.89	0.44				1

Equivalent static radial load

Po = Xo.Fr + Yo.Fa

X_0	Y_0
0.6	0.5

For single or DT bearing arrangement :

If Po <Fr, then use Po = Fr