Brand of NTN corporation

Technical data



6308NRC3

Single row deep groove ball bearings

Deep groove ball bearing, radial contact, pressed steel cage, snap ring & groove on outer diameter, open

VISUAL (S)

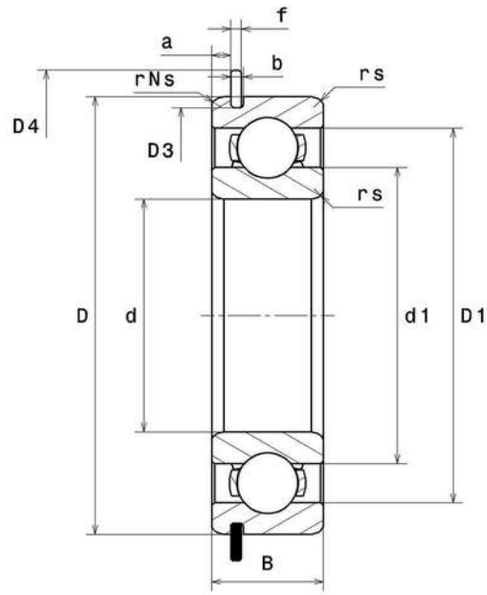

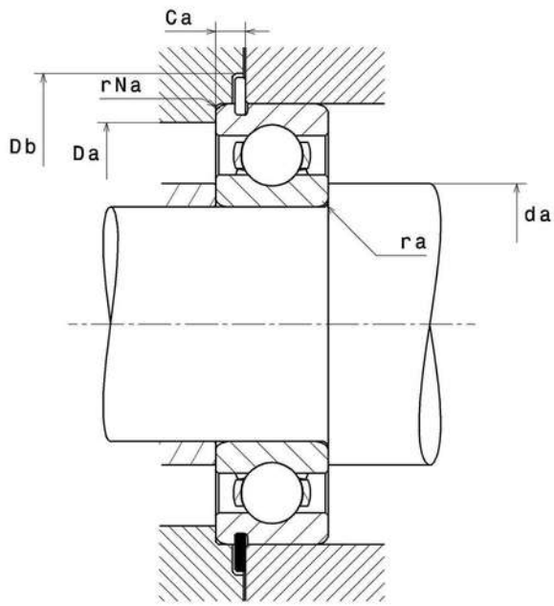

6308NRC3
Single row deep groove ball bearings

PRODUCT DEFINITION	
Brand	SNR
d - Internal diameter	40 mm
D - External diameter	90 mm
B - Bearing/Inner ring width	23 mm
d1 - External diameter inner ring	51,9 mm
D1 - Inner diameter outer ring	78,1 mm
a min - Min position Groove	3,07 mm
a max - Max position groove	3,28 mm
Ca min - Mini segment position	5,43 mm
Ca max - Max segment position	5,74 mm
rs - Min fillet radius	1,5 mm
rNs - Min fillet radius	0,5 mm
D3 - Max bottom groove diameter	86,79 mm
b min - Min groove width	2,7 mm
b max - Max groove width	3 mm
r0 max - Max bottom groove radius	0,6 mm
D4 max - Max outer diameter of assembled stop ring	96,5 mm
f - Stop ring thickness	2,41 mm
Snap ring reference	R90
Radial clearance class	C3
Mass	0,612 kg

PRODUCT PERFORMANCE	
C - Dynamic load	42900000 mN

6308NRC3
Single row deep groove ball bearings

PRODUCT PERFORMANCE	
C0 - Static load	24000000 mN
Cu - Fatigue limit load	1090000 mN
f0 - Coefficient	13.2
N ref - Reference thermal speed	54000 °/s
N lim - Mechanical Limit Speed	78000 °/s
Tmin - Min operating temperature	233,15 °K
Tmax - Max operating temperature	393,15 °K

BEARING FREQUENCIES	
BPFO - Over rolling frequency on outer ring (60 rpm)	3.072 Hz
BPFI - Over rolling frequency on inner (60 rpm)	4.928 Hz
BSF - Over rolling frequency on rolling element (60 rpm)	4.078 Hz
BRF - Rotational frequency – rolling element (60 rpm)	2.039 Hz
FTF - Rotational frequency - cage (60 rpm)	0.384 Hz

ABUTMENT	
da min - Min shoulder diameter IR	48 mm
da max - Max shoulder diameter IR	0 mm
Da max - Max shoulder diameter OR	82 mm
ra max - Max shaft & housing fillet radius	1,5 mm
rNa max - Max fillet radius on segment side	0,5 mm
Db min - Min stop ring position diameter	98 mm

6308NRC3
Single row deep groove ball bearings

INDUSTRY CALCUL FACTORS

Equivalent dynamic radial load

P = X.Fr + Y.Fa

$\frac{f_0 F_a}{C_0}$	e	Fa / Fr ≤ e		Fa / Fr > e	
		X	Y	X	Y
0.172	0.19	1	0	0.56	2.3
0.345	0.22				1.99
0.689	0.26				1.71
1.03	0.28				1.55
1.38	0.3				1.45
2.07	0.34				1.31
3.45	0.38				1.15
5.17	0.42				1.04
6.89	0.44				1

Equivalent static radial load

Po = Xo.Fr + Yo.Fa

X_0	Y_0
0.6	0.5

For single or DT bearing arrangement :

If Po <Fr, then use Po = Fr