TARGET SPECIFICATIONS

MINUMUM TARGET DIAMETER	≥ 3.0 mm
MINIMUM TIME BETWEEN LEADING EDGE OF TARGETS	105.0 ms
MINIMUM TARGET VELOCITY	≥ 0.1 M/s
MAXIMUM TARGET VELOCITY	≤ 50 M/s

WIRING DIAGRAM

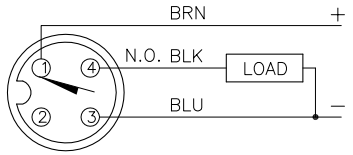

OUTPUT: AP6X

SPECIFICATIONS

OPERATING VOLTAGE	10–30 VDC
RIPPLE	≤ 10%
VOLTAGE DROP ACROSS CONDUCTING SENSOR	≤ 2.2 V at 200 mA
OUTPUT FUNCTION–DYNAMIC	NORMALLY OPEN 3–WIRE DC SELF–CONTAINED
PULSE DURATION	100 ms
SWITCHING FREQUENCY	8 Hz MAX.
TTL COMPATIBLE	NO
SHORT–CIRCUIT PROTECTED	YES
TRIGGER CURRENT FOR OVERLOAD PROTECTION	≥ 270 mA
CONTINUOUS LOAD CURRENT	≤ 200 mA
LEAKAGE (OFF–STATE) CURRENT	<10μ A
NO–LOAD CURRENT	5.5–9.5 mA
TIME DELAY BEFORE AVAILABILITY	≤ 120 ms
POWER–ON EFFECT PROTECTION	INCORPORATED
REVERSE POLARITY PROTECTION	INCORPORATED
WIRE–BREAK PROTECTION	INCORPORATED
PROTECTION AGAINST TRANSIENTS	2 kV, 1 ms, 1 kΩ
OPERATING TEMPERATURE	–25°C to +70°C (–13°F to +158°F)
ENCLOSURE	MEETS NEMA 1, 3, 4, 6, 13 AND IEC IP67
SHOCK	30 g, 11 ms
VIBRATION	55 Hz, 1 mm AMPLITUDE (IN ALL 3 PLANES)
LED FUNCTION	RED: OUTPUT ENERGIZED
RING DIAMETER	30.1 mm = 1.185" (NOMINAL)
MATING PLUGS & CABLES	4–PIN "EUROFAST" CONSTRUCTION
SHIELDED	YES

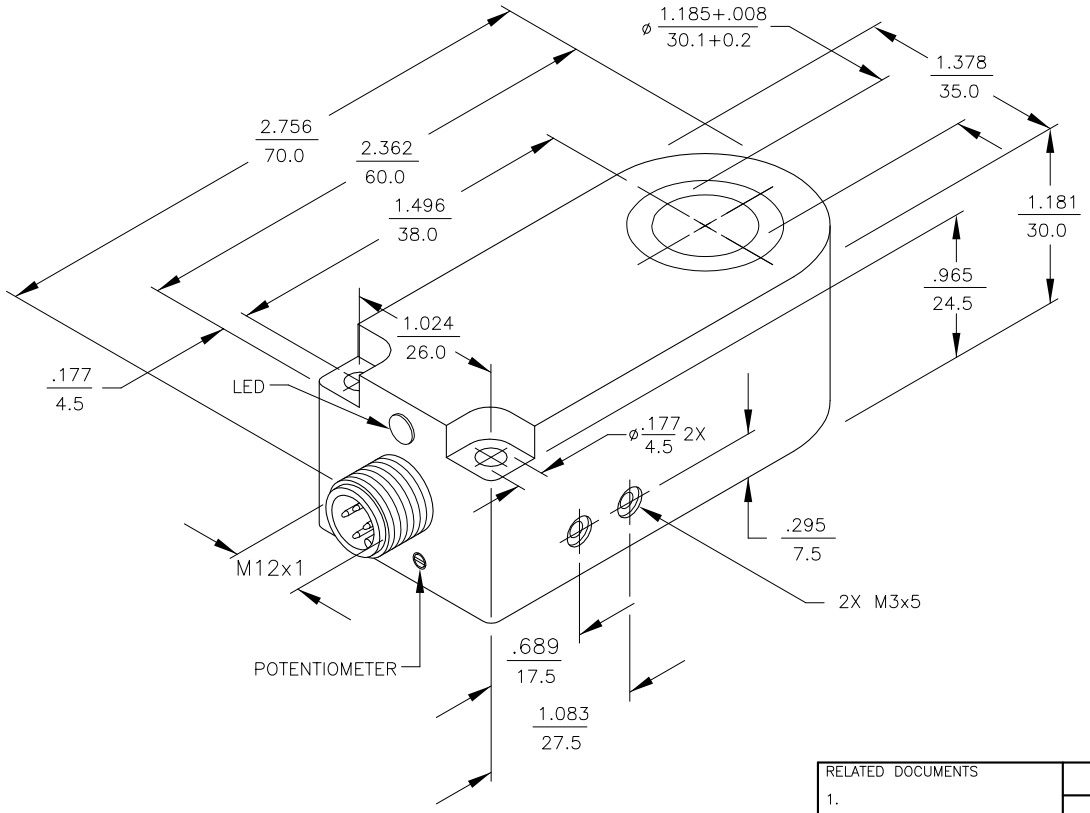

RELATED DOCUMENTS
1.
2.
3.
4.

3RD ANGLE PROJECTION

THIS DRAWING IS PROPERTY OF TURCK INC. USE OF THIS DOCUMENT WITHOUT WRITTEN PERMISSION IS PROHIBITED.

TURCK INC
High Technology Sensors and Automation Controls
3000 CAMPUS DRIVE
MINNEAPOLIS, MN 55441
1–800–544–7769
(763) 553–7300
(763) 553–0708 fax
turck.com

MATERIAL
HOUSING: PA 12–GF30 PLASTIC
SENSING RING: POM PLASTIC

FINISH

ALL DIMENSIONS DISPLAYED ON THIS DRAWING ARE FOR REFERENCE ONLY

CONTACT TURCK FOR MORE INFORMATION

DRFT RJP | DATE 9/15/92
DSGN | SCALE NONE

UNIT OF MEASUREMENT
INCH [MILLIMETER]
DO NOT SCALE THIS DRAWING

DESCRIPTION
Bi30R–W30–DAP6X–H1141

IDENTIFICATION NO. M1404500 | REV B

FILE: M1404500 | SHEET 1 OF 1

REV	DESCRIPTION	BY	DATE	ECO NO.
B	UPDATE TO CURRENT TITLEBLOCK	RDS	07/16/02	5504