Product Data Sheet **8315100229**

VWCF120KJJPS
AF120-00229 24V P/2U
6.500

ebmpapst

engineering a better life



AF120-00229 24V P/2U 6.500

INDEX

1 General 3
2 Mechanics 3
2.1 General 3
2.2 Connections 3
3 Operating Data 5
3.1 Electrical Interface - Input 5
3.2 Electrical Operating Data 6
3.3 Electrical Interface - Output 7
3.4 Electrical Features 8
3.5 Aerodynamics 9
3.6 Sound Data 10
4 Environment 10
4.1 General 10
4.2 Climatic Requirements 11
4.3 EMC 11
5 Safety 13
5.1 Electrical Safety 13
5.2 Approval Tests 13
6 Reliability 13
6.1 General 13

1 General

Fan type	Axial	
Rotating direction looking at rotor	Counterclockwise	
Airflow direction	Air outlet over struts	
Bearing system	Ball bearing	
Mounting position - shaft	Any	

2 Mechanics

2.1 General

Width	120 mm	
Height	120 mm	
Depth	38,0 mm	
Mass	0,37 kg	
Housing material	Plastic	
Impeller material	Plastic	
Max. torque when mounted across both mounting flanges Screw size	Wire outlet corner: 80 Ncm Remaining corners: 80 Ncm ISO 4762 - M4 degreased, without an additional brace and without washer	

2.2 Connections

Electrical connection	Wires	
Lead wire length Tolerance	L = 310 mm +- 10,0 mm	



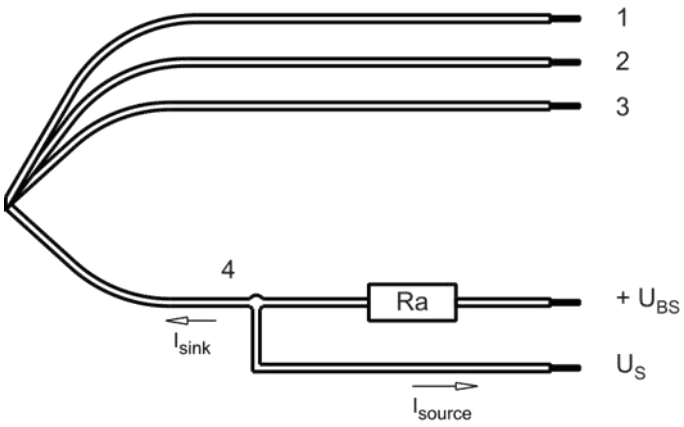

Wire	Color	Operation	Wire size	Insulation diameter
1	blue	- GND	AWG 24	1,6 mm
2	red	+ UB	AWG 24	1,6 mm
3	violet	PWM	AWG 24	1,6 mm
4	white	Tacho	AWG 24	1,6 mm

The auxiliaries shown on the schematic diagram (which are required for the intended use) are not part of our delivery.

3 Operating Data

3.1 Electrical Interface - Input

Control input	PWM

Features

Inpute type	Open collector	
PWM - Frequency		1 kHz - 30 kHz typical: 25 kHz
Max. voltage for logic "Low"		0,2 V
Maximum source current	short circuit current	<= 1 mA
Typical time until warm restart	After shutdown by PWM	~ 9 s

Characteristics

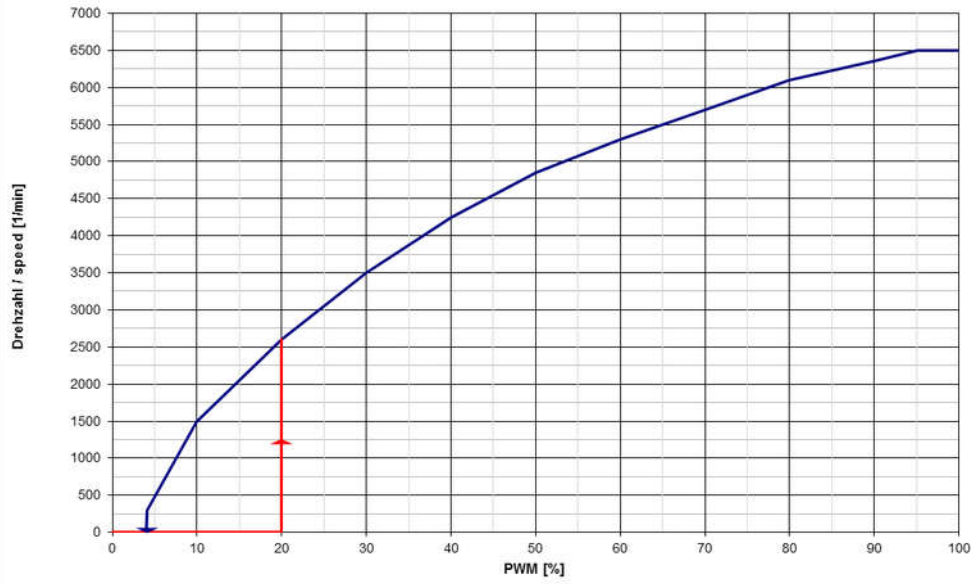

Schematics

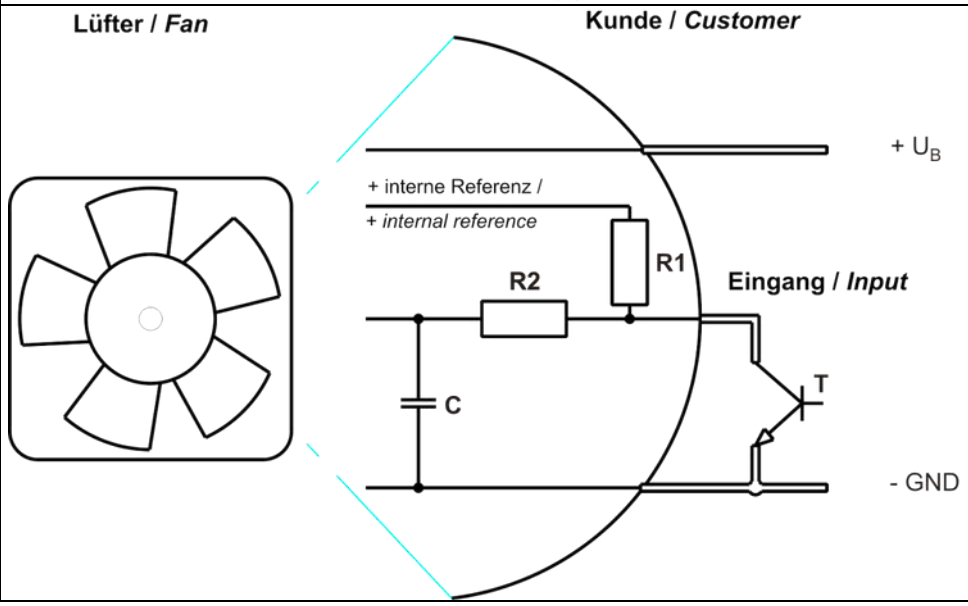

Because it is an open-loop control, the PWM characteristic can vary depending on the location.

3.2 Electrical Operating Data

Measurement conditions: Normal air density = 1,2 kg/m3; Temperature 23°C +/- 3°C; Motor axis horizontal; warm-up time before measuring 5 minutes (unless otherwise specified). In the intake and outlet area should not be any solid obstruction within 0,5 m.

Δp = 0: corresp. to free air flow (see chapter aerodynamics)
I: corresp. to arithm. mean current value

Name	Condition		
PWM 0001	PWM: 100 %; f: 25 kHz		

Features	Condition	Symbol	Values		
Voltage range		U	16 V		28 V
Nominal voltage		U_N		24 V	
Power consumption Tolerance	Δp = 0 PWM 0010	P	16 W +- 20 %	30 W +- 17,5 %	35 W +- 17,5 %
Current consumption Tolerance	Δp = 0 PWM 0010	I	1.000 mA +- 17,5 %	1.250 mA +- 17,5 %	1.250 mA +- 17,5 %
Speed Tolerance	Δp = 0 PWM 0010	n	5.050 1/min +- 15 %	6.500 1/min +- 10 %	6.700 1/min +- 15 %

3.3 Electrical Interface - Output

Tacho type	/2 (open collector)

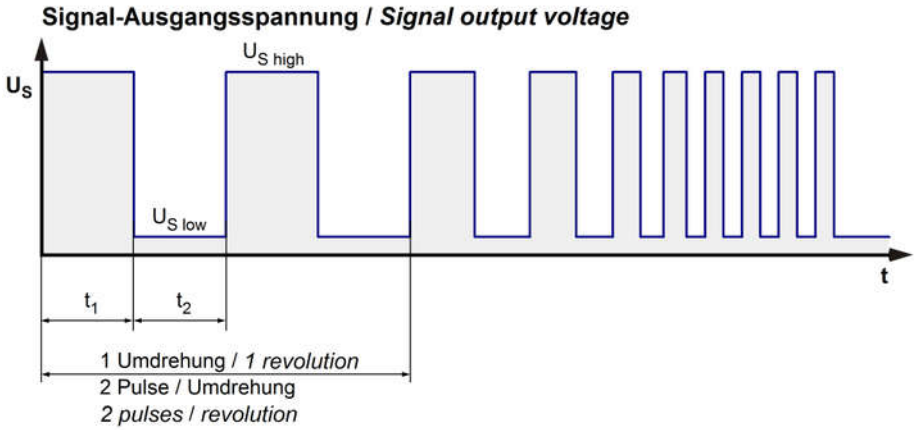

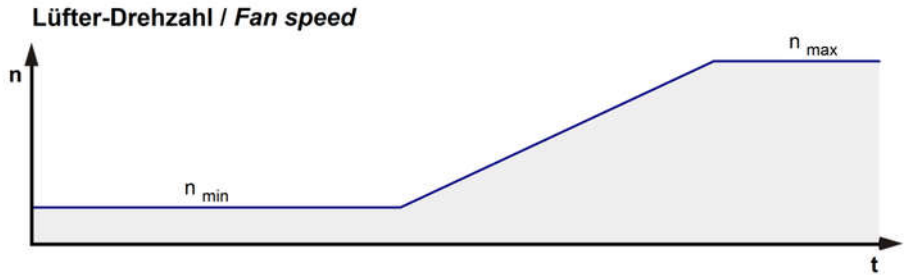

$$Ra = \frac{U_{BS} - U_{S\,low}}{I_{sink}}$$

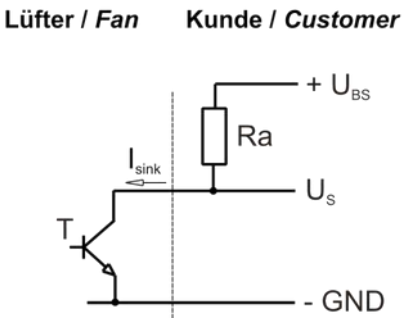

Features		Note	Values
Tacho operating voltage	U_{BS}		<= 60 V
Tacho signal Low	$U_{S\,low}$	I sink: 2 mA	<= 0,4 V
Tacho signal High	$U_{S\,high}$	I source: 0 mA	<=60 V
Maximum sink current	I_{sink}		<= 4 mA
External resistor		External resistor Ra from UBS to US required. All voltages measured to GND.	
Tacho frequency		(2 x n) / 60	
Tacho isolated from motor		No	
Slew rate			=> 0,5 V/us

n = revolutions per minute (1/min)

3.4 Electrical Features

Electronic function	Contr. PCB	
Reversed polarity protection Max. residual current at U_N	Rectifying diode I_F <= 200 uA	
Locked rotor protection	Auto restart	
Locked rotor current at U_N	I_{block} approx. 800 mA	
Clock signal at locked rotor	t_3 / t_4 typical: 1 s / 9 s	

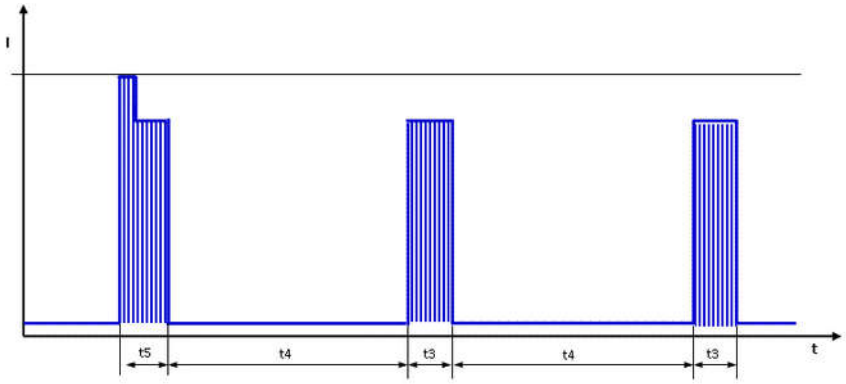

First pulse t5 typical 1,6s (1,3 .. 1,9s) followed by t4. Afterwards cyclical t3/t4.

3.5 Aerodynamics

Measurement conditions:	Measured with a double chamber intake rig acc. to DIN EN ISO 5801. Normal air density = 1,2 kg/m3; Temperature 23°C +/- 3°C; In the intake and outlet area should not be any solid obstruction within 0,5 m. Motor shaft horizontal. The information is only valid under the specified test conditions and may be changed by the installation conditions. If there are deviations from the standard test conditions, the characteristic values must be checked under the installed conditions.

a.) Operation condition:

6.500 1/min at free air flow	PWM 100 %; f: 25 kHz		

Max. free-air flow (Δp = 0 / V̇ = max.)	340 m3/h	
Max. static pressure (Δp = max. / V̇ =0)	320 Pa	

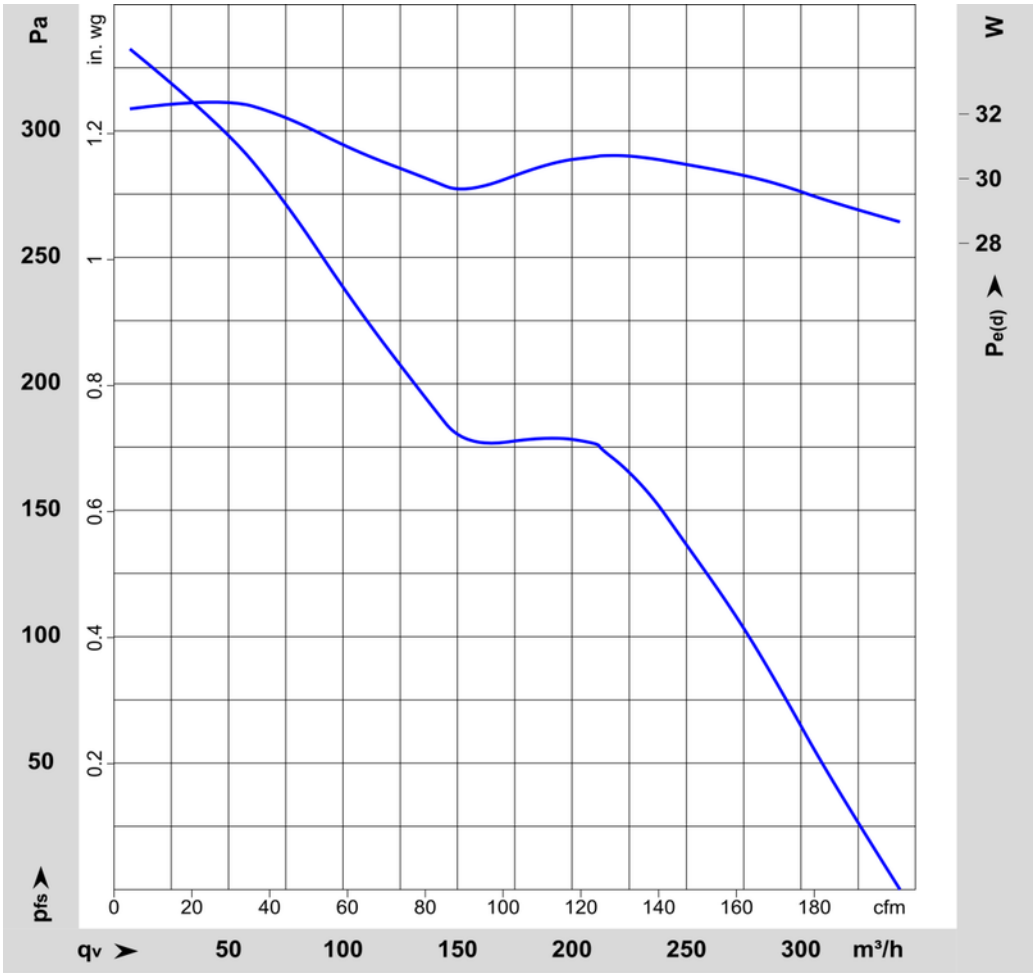

3.6 Sound Data

Measurement conditions:	Sound pressure level: 1 meter distance between microphone and the air intake. Sound power level: According to ISO 13347-3. Measured in a semianechoic chamber with a background noise level of Lp(A) < 5 dB(A) For further measurement conditions see chapter aerodynamics.

a.) Operation condition:

6.500 1/min at free air flow	PWM 100 %; f: 25 kHz		

Optimal operating point	290 m3/h @ 82 Pa	
Sound power level at the optimal operating point	7 bel(A)	
Sound pressure level at free air flow, measured in rubber bands	60 dB(A)	

4 Environment

4.1 General

Min. permitted ambient temperature TU min.	-20 °C	
Max. permitted ambient temperature TU max.	70 °C	
Min. permitted storage temperature TL min.	-40 °C	
Max. permitted storage temperature TL max.	80 °C	

4.2 Climatic Requirements

IP-protection type (certified)	IP 68 (for fan only, not for connector if applicable) **)	
Humidity requirements	humid temperature, cyclic; according to DIN EN 60068-2-38, 10 cycle and condensation water check; according to DIN EN ISO 6270-2, 14 days	
Salt fog requirements	Salt fog, constant, (Bellcore II); according to DIN EN 60068-2-22, 30 days, operation at nominal speed	

Permitted application area:
The product is for the use in open and unsheltered areas. Direct exposure to water as well as saline ambient conditions are allowed provided that this does not prevent the normal operation.

Pollution degree 4 (according DIN EN 60664-1)
It occurs permanent conductivity caused by conductive dust, rain or moisture.

**) The specification of the IP protection refers to the conditions mentioned in certification of the fan. The above mentioned short description of the protection scope is not final. For detailed information of the respective protection scope and definitions, see certification as well as DIN EN 60529 (protection by housings) and ISO 20653 (for vehicles) with the letter K.

Short description of the IP-protection type:
Solid particle Protection: Dust tight.
Protection against deliberate contact: Protected against contact to hazardous parts with a wire.
Protection against water: The fan test according to IP68 (Based on IEC 60529), is conducted in non-operating mode. The fan is tested by a complete immersion in water for a period of 2h at a water-level of 1,2m. Electrical connections are not immersed since they are customer specific.

Please require severity levels and specification parameters from the responsible development departments.

4.3 EMC

Kind	**Radiated Emission; 30 MHz - 1000 MHz**
According	DIN EN 55032:2016-02
Ceck accuracy / Limit	Class B
Result	Below limit Class B

Kind	**Electrostatic Discharge Immunity Test**
According	DIN EN 61000-4-2:2001-12
Ceck accuracy / Limit	Contact Discharge +/- 4 kV; Air Discharge +/- 8 kV
Result	A: The monitored function operates as designed during and after exposure to a disturbance.

Kind	**Electromagnetic Field Immunity Test**
According	DIN EN 61000-4-3:2006-12
Ceck accuracy / Limit	10 V/m; 80 - 1000 MHz; AM; m = 0,8; f = 1 kHz; 1%; t = 3 s
Result	A: The monitored function operates as designed during and after exposure to a disturbance.

Kind	**Electrical Fast Transient / Burst Immunity Test**
According	DIN EN 61000-4-4:2005-07
Ceck accuracy / Limit	+/- 2 kV on Power Lines; Coupling: POS, NEG, {PE}, ALL, 5 kHz and 100 kHz; 1 min
Result	A: The monitored function operates as designed during and after exposure to a disturbance.

Kind	**Immunity to Conducted Disturbances, Induced by RF-Fields**
According	DIN EN 61000-4-6:2001-12
Ceck accuracy / Limit	10 Vrms; 150 kHz - 80 MHz; AM; m = 0,8; f = 1 kHz; 1%; t = 3 s
Result	A: The monitored function operates as designed during and after exposure to a disturbance.

5 Safety

5.1 Electrical Safety

Dielectric strength DIN EN 62368 and DIN EN 60335 A.) Type test Measuring conditions: After 48h of storage at 95% R.H. and 25°C. No arcing or breakdown is allowed! All connections together to ground. B.) Routine test Measuring conditions: At indoor climate. No arcing or breakdown is allowed! All connections together to ground.	500 VAC / 1 Min. 850 VDC / 1 Sec.	
Isolation resistance Measuring conditions: After 48h of storage at 95% R.H. and 25°C measured with U=500 VDC for 1 min.	RI > 10 MOhm	
Clearance / creepage distance	1,0 mm / 1,2 mm	
Protection class	III	

5.2 Approval Tests

CE	EC Declaration of Conformity	Yes
EAC	Eurasian Conformity	Yes
UL	Underwriters Laboratories	Yes / UL507, Electric Fans E38324
VDE	Association for Electrical, Electronic and Information Technologies	Yes / Approval acc. to EN 62368 - Audio/video, information and communication technology equipment
CSA	Canadian Standards Association	Yes / CSA audited by UL according to C22.2 No. 113 Fans and Ventilators
CCC	China Compulsory Certification	Not applicable

6 Reliability

6.1 General

Life expectancy L10 at TU = 40 °C	45.000 h	
Life expectancy L10 at TU max.	22.500 h	
Life expectancy L10 acc. to IPC 9591 at TU = 40 °C	75.000 h	

Copying of this document, and giving it others and the use or communication of the contents thereof, are forbidden without express authority. Offenders are liable to the payment of damages. All rights are reserved in the event of the grant of a patent or the registration of a utility model or design.

Schutzvermerk nach DIN ISO 16016 beachten! Refer to protection notice DIN ISO 16016!

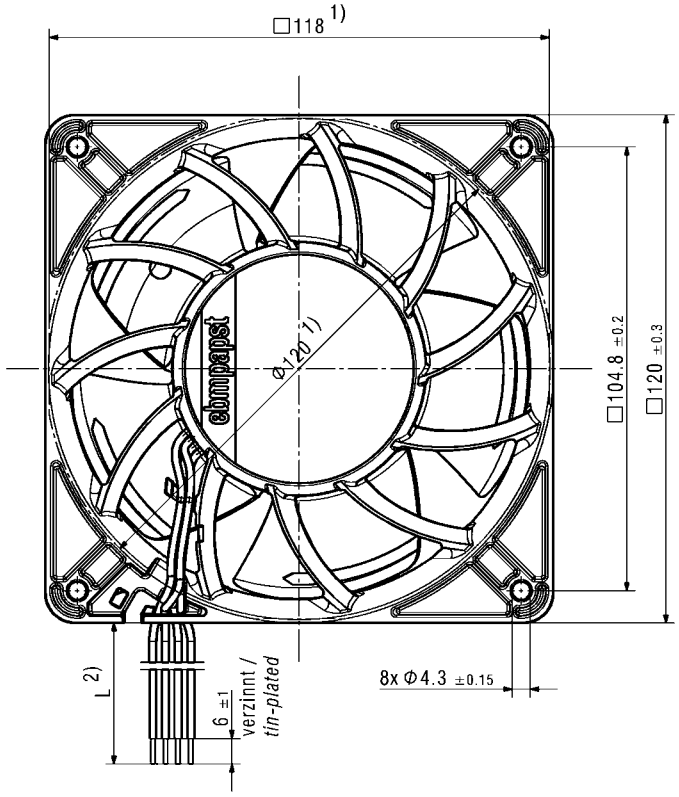

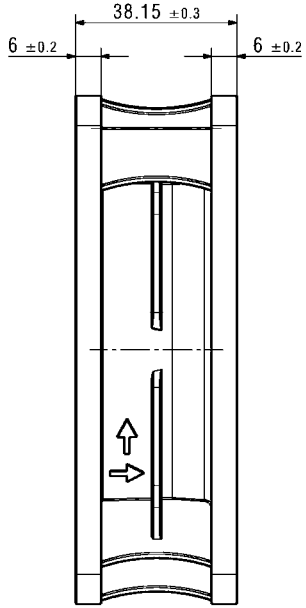

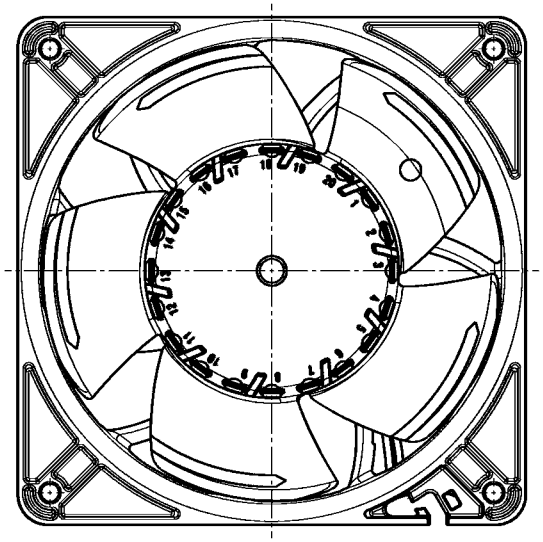

1) Maße für Montageausschnitt
Dimensions for assembly wall
2) Anzahl und Länge der Litzen siehe Datenblatt
Length and number of wires see datasheet

- Axialspiel der Kugellager mit Feder spielfrei verspannt
Ball bearing without axial clearance by a pre-loaded spring

Dokument-Status / Document-State	CATIA-Version/ CATIA-Version	CAD-Umgebung/ CAD-Environment	Werkstoff / Material:	Volumen / Volume (cm^3):	
Aend.-Nr./ Change-No.	8315100142 CPR000-			Gewicht / Mass (g):	
	3D-Referenzmodell / 3D-Reference model		Titel / Title:		
Toleranzierung / Tolerances:	Datum	Name			
	Bearb./ Drawn				
Allgemeintoleranzen / Gen. Tolerances:	Gepr./ Checked		Zchg.-Nr./ Drawing No:	Ers.f.Zchg. / Replaces:	
	Freig./ Release				
ebmpapst ebm-papst St.Georgen GmbH & Co KG			Dokumenttyp / Type of Document	Teildokument (Blatt/Page)	Index / Index: -
			Format / Size:	Massstab/Scale	