Rittal – The System.

Faster – better – everywhere.



Erdungsset
Earthing kit
Kit de mise à masse
Aardingsset
Jordningsset
Set di massa a terra
Juego de puesta a tierra

DK 7829.150

Montageanleitung
Assembly instructions
Notice de montage
Montagehandleiding
Montageanvisning
Instruzioni di montaggio
Instrucciones de montaje

ENCLOSURES POWER DISTRIBUTION CLIMATE CONTROL IT INFRASTRUCTURE SOFTWARE & SERVICES

RITTAL

FRIEDHELM LOH GROUP

TX 25	SW 13
	

		5x12 	6,4 	6,1 	8,4 	8,2 	8,4 	M8 	
Seitenwände / side panels	2	2	2	2	2	2	2	2	4
Sichttür / glazed door	1	1	1	1	-	-	-	-	2
Rücktür / rear door	1	1	1	1	1	1	1	1	2
Dachblech / roof plate	3	3	3	3	1	1	1	1	6
Aufsatzblech / cover plate	1	1	1	1	1	1	1	1	2
Anzahl / quantity	8	8	8	8	5	5	5	5	16

Rahmen / frame

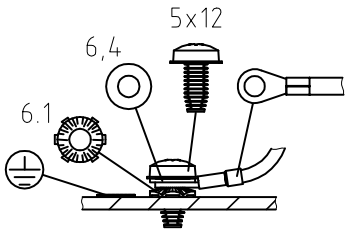

$M_D = 4 + 1Nm$

Sichttür/glazed door

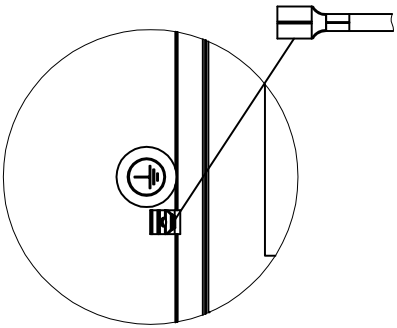

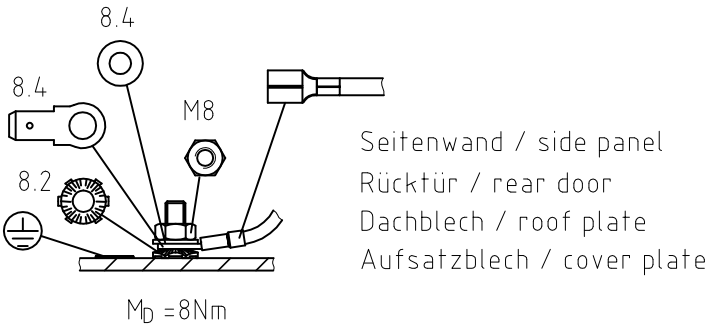

Dachblech / roof plate

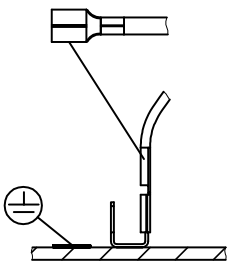

Rittal – The System.

Faster – better – everywhere.

- Enclosures
- Power Distribution
- Climate Control
- IT Infrastructure
- Software & Services

02.2015/A2779304IT74/259681

RITTAL GmbH & Co. KG
Postfach 1662 · D-35726 Herborn
Phone + 49(0)2772 505-0 · Fax + 49(0)2772 505-2319
E-mail: info@rittal.de · www.rittal.com