2TMD041600D0082 | 28.03.2025

Operating Instructions

ABB-Welcome

Mini video outdoor station

M2131.P.-.

M2136.P.-.



Power and productivity
for a better world™

Table of contents

1 Safety 3
2 Intended use 3
3 Environment 3
3.1 ABB devices 3
3.2 Front overview 4
3.3 Terminal description 5
3.4 Lock type and connection 7
4 Technical data 8
5 Mounting/Installation 9
5.1 Requirement for the electrician 9
5.2 Mounting 10
5.2.1 Preparation 10
5.2.2 Surface mounting 10
5.2.3 Flush mounting 11
5.2.4 Cavity wall installation 13
5.2.5 Dismantling 15
5.2.6 Replace the nameplate 15
5.2.7 Installation situations 16
6 Commissioning 17
6.1 Configure functions of the 1st/2nd pushbutton 17
6.2 Setting general call function 19
7 Operation 20
7.1 Manage ID cards by mini outdoor station 20
Notice 22

1 Safety



Warning

Electric voltage!

Dangerous currents flow through the body when coming into direct or indirect contact with live components.

This can result in electric shock, burns or even death.

– Disconnect the mains power supply prior to installation and/or disassembly!
– Permit work on the 110-240 V supply system to be performed only by specialist staff!

2 Intended use

The outdoor station is an integral part of the ABB-Welcome door communication system and operates exclusively with components from this system.

3 Environment



Consider the protection of the environment!

Used electric and electronic devices must not be disposed of with household waste.

– The device contains valuable raw materials that can be recycled. Therefore, dispose of the device at the appropriate collecting facility.

3.1 ABB devices

All packaging materials and devices from ABB bear the markings and test seals for proper disposal. Always dispose of the packing materials and electric devices and their components via an authorized collection facility or disposal company.

ABB products meet the legal requirements, in particular the laws governing electronic and electrical devices and the REACH ordinance.

(EU-Directive 2002/96/EG WEEE and 2002/95/EG RoHS)

(EU-REACH ordinance and law for the implementation of the ordinance (EG) No.1907/2006)

3.2 Front overview

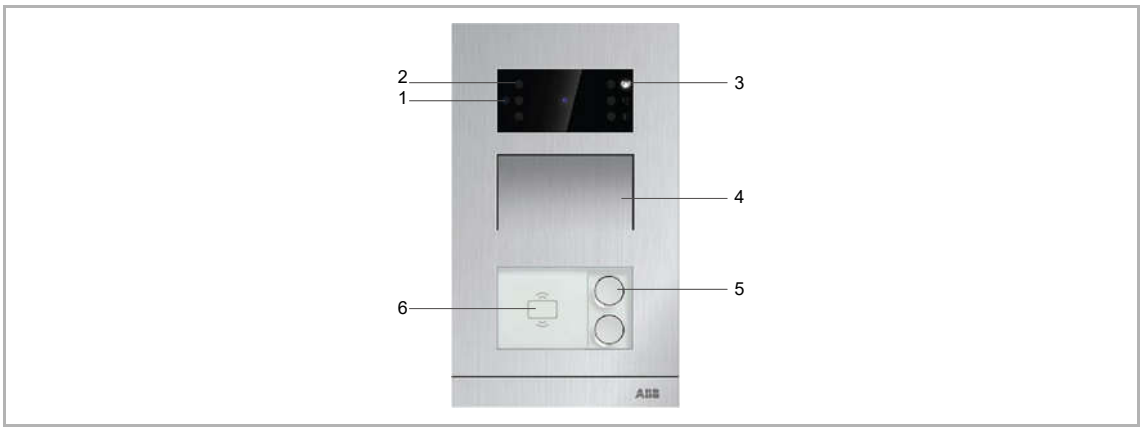

Fig. 1

No	Function
1	Light sensor
2	Infrared LED
3	Indicator LED (ring, call and door open)
4	Speaker and microphone integration
5	Pushbutton
6	Nameplate

Tab.1

3.3 Terminal description

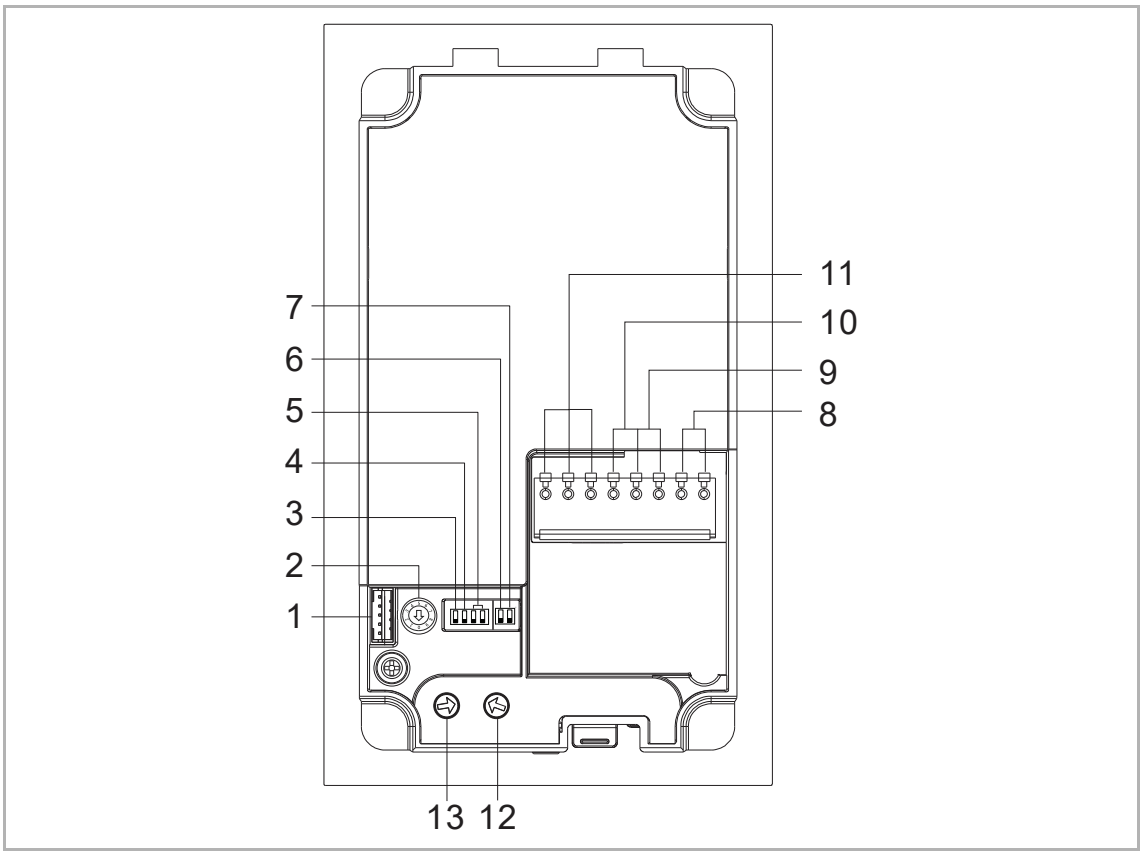

Fig. 2

No	Function
1	Connector for device software update
2	Rotary switch to set the address of outdoor station (1-9)
3	Set feedback tone of pushbutton ON/OFF
4	Set general call to all indoor stations in one family: ON/OFF If GC=ON, press button 1/button 2, all IS ring
5	Configuration function of 1st/2nd round pushbutton 5A mini video outdoor station with one pushbutton 3 -> OFF; 4 -> OFF = Call IS 001 3 -> ON; 4 -> OFF = Switch on light 3 -> OFF; 4 -> ON = Call guard unit 3 -> ON; 4 -> ON = Call IS 001 5B mini video outdoor station with two pushbuttons 3 -> OFF; 4 -> OFF = Call IS 001/002 3 -> ON; 4 -> OFF = Switch on light/call IS 001 3 -> OFF; 4 -> ON = Call guard unit/call IS 001 3 -> ON; 4 -> ON = Call IS 001/call IS 002

6	Set the video mode PAL/NTSC OFF = PAL video mode ON = NTSC video mode
7	Set default lock OFF = set (Lock-GND) as default lock ON = set (COM-NC-NO) as default lock *Default lock is controlled by "unlock" button on IS
8	Plug-in clamps (a,b) for bus connection
9	Plug-in clamps (Exit-GND) for exit button
10	Plug-in clamps (Lock-GND) for door opener
11	Plug-in clamps (COM-NC-NO) for floating output, door opener
12	Rotary switch to adjust default door lock release time, 1-10s
13	Rotary switch to adjust loudspeaker volume

Tab.2

3.4 Lock type and connection

Lock type	Operation type	Voltage	Wiring type
Electrical strike lock, 12 V	Power on to open	12 VDC/AC	Type A Type B
Electrical strike lock, 24 V	Power on to open	24 VDC/AC	Type B
Electrical rim lock, 12 V	Power on to open	12 VDC	Type A Type B
Electrical mortise lock	Power off to open	12 VDC	Type C
Magnetic lock	Power off to open	12/24 V DC	Type C

Tab.3

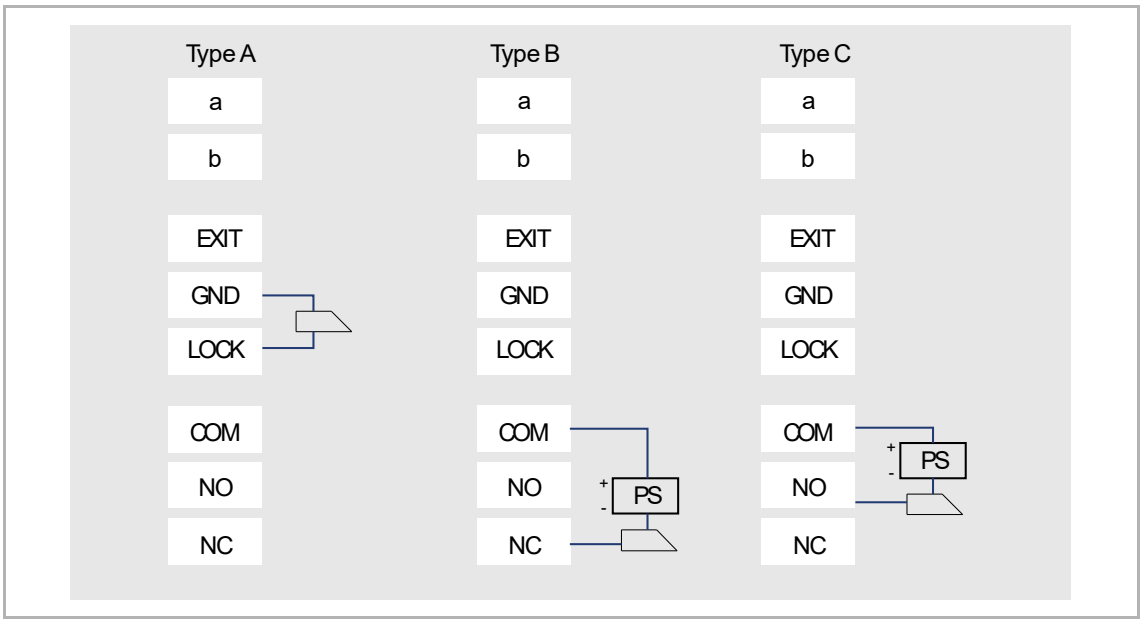

Fig. 3

4 Technical data

Designation	Value
Operating temperature	-40 °C - +70 °C
Protection	IP 54
Power supply, door opener (Lock-GND)	18 V 4 A impulsive, 250 mA holding
Floating supply, door opener (COM-NC-NO)	30 V DC/AC 1A
Single-wire clamps	2 x 0.28 mm^2 - 2 x 0.75 mm^2
Fine-wire clamps	2 x 0.28 mm^2 - 2 x 0.75 mm^2
Bus voltage	20-30 V DC

Tab.4

5 Mounting/Installation



Warning

Electric voltage!
Dangerous currents flow through the body when coming into direct or indirect contact with live components.
This can result in electric shock, burns or even death.
– Disconnect the mains power supply prior to installation and/or disassembly!
– Permit work on the 110-240 V supply system to be performed only by specialist staff!

5.1 Requirement for the electrician



Warning

Electric voltage!
Install the device only if you have the necessary electrical engineering knowledge and experience.
– Incorrect installation endangers your life and that of the user of the electrical system.
– Incorrect installation can cause serious damage to property, e.g. due to fire.

The minimum necessary expert knowledge and requirements for the installation are as follows:
– Apply the "five safety rules" (DIN VDE 0105, EN 50110):
1. Disconnect
2. Secure against being re-connected
3. Ensure there is no voltage
4. Connect to earth and short-circuit
5. Cover or barricade adjacent live parts.
– Use suitable personal protective clothing.
– Use only suitable tools and measuring devices.
– Check the type of supply network (TN system, IT system, TT system) to secure the following power supply conditions (classic connection to ground, protective grounding, necessary additional measures, etc.).

5.2 Mounting

5.2.1 Preparation

Use gloves to protect yourself from being cut.

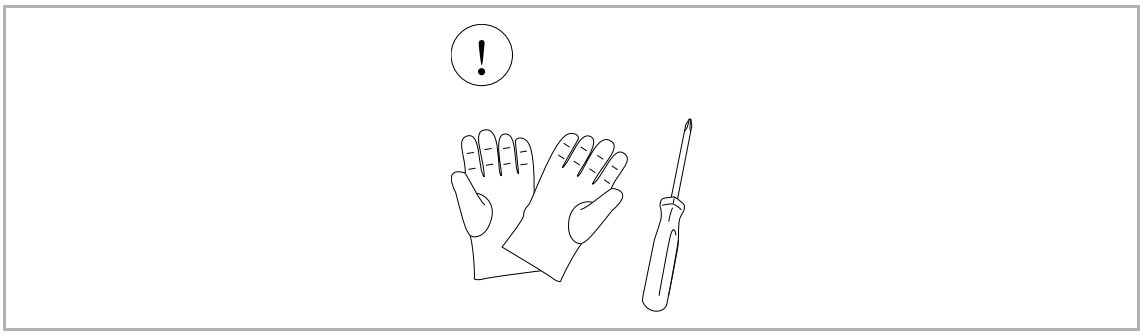

Fig. 4

5.2.2 Surface mounting

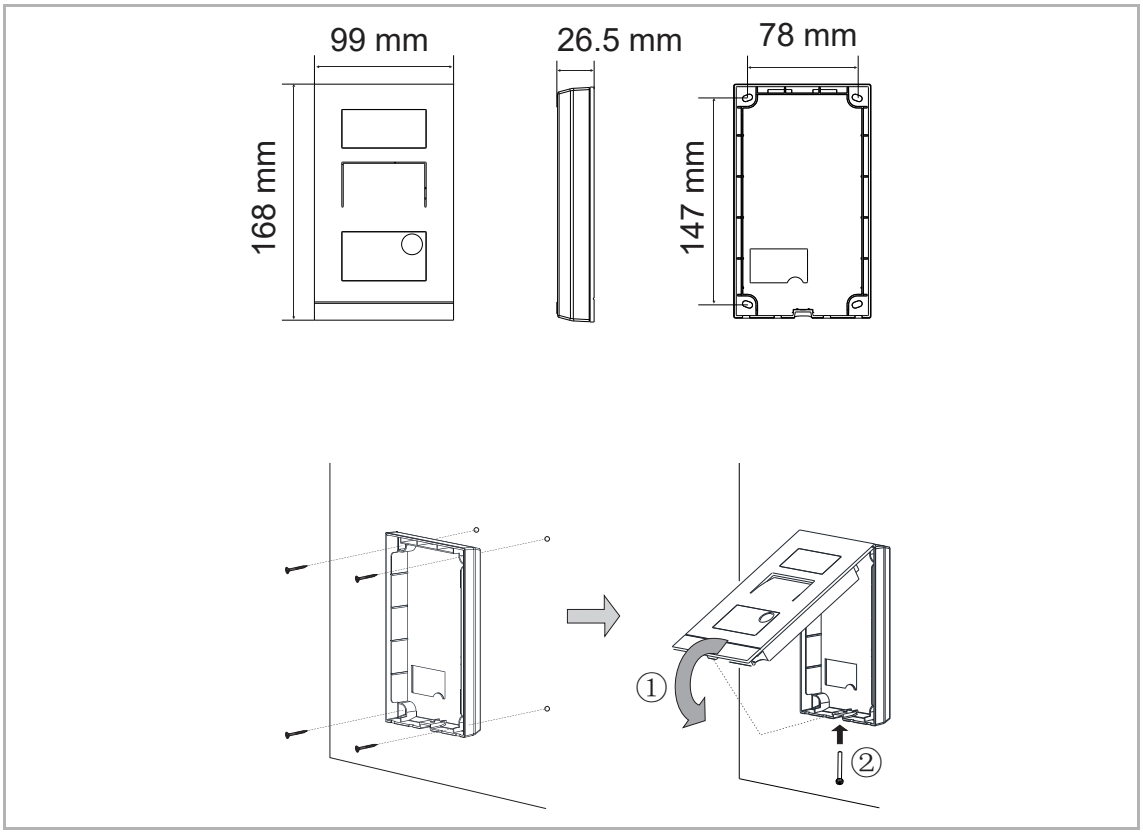

Fig. 5

5.2.3 Flush mounting

Product dimension

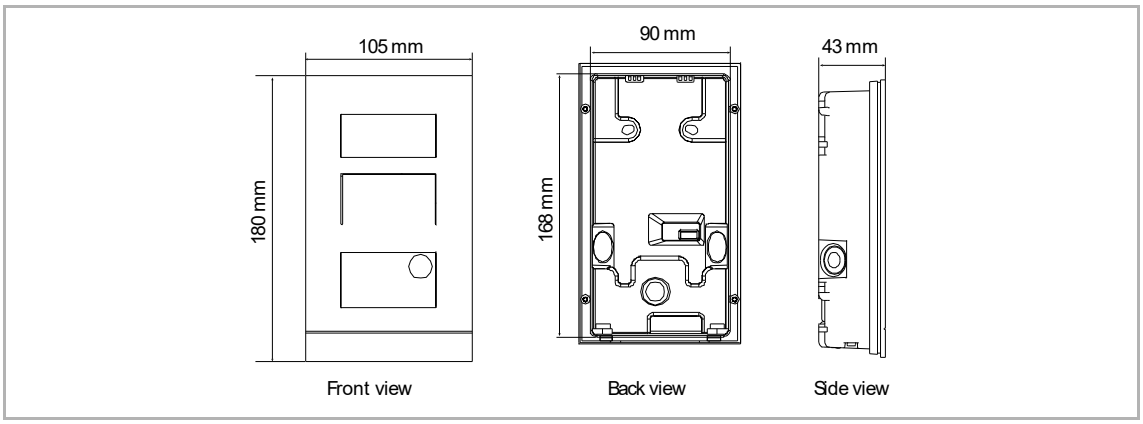

Fig. 6

Mounting without pre-installation box

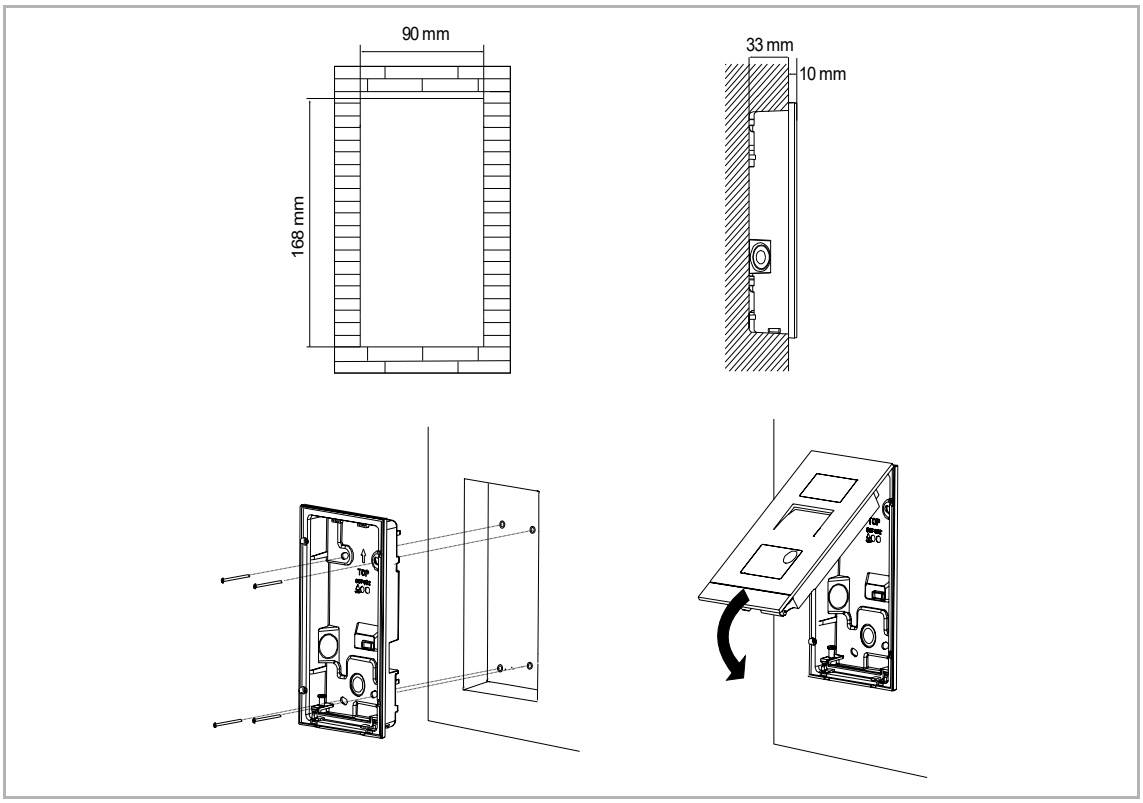

Fig. 7

Mounting with pre-installation box

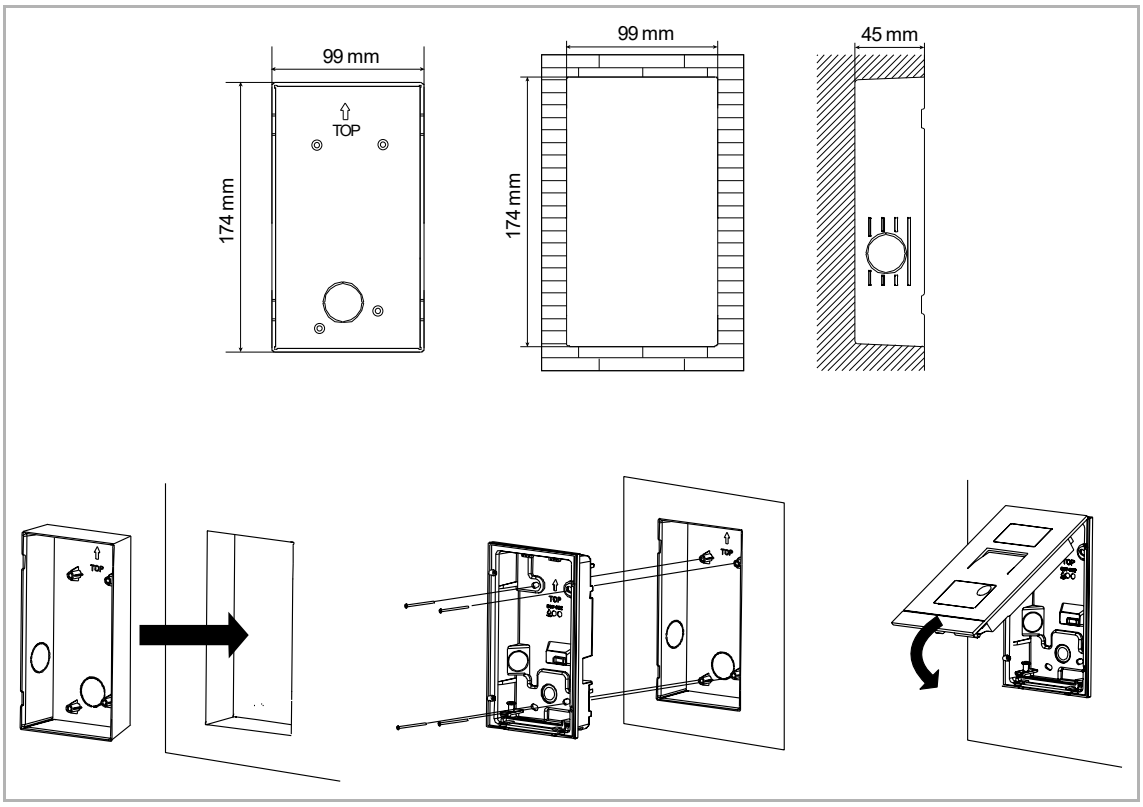

Fig. 8

Precautions for installation

When opening a square groove for the lower cover of the equipment, you must control the embedded depth, ensuring the outer edge of the lower cover can be fully attached to the wall, but should not leave a large gap between the exposed parts of the face shell and the wall after the installation of the equipment;

Do not install in raining, humid or dusty environments, and not near objects of high temperature or strong corrosion.

5.2.4 Cavity wall installation

Product dimension

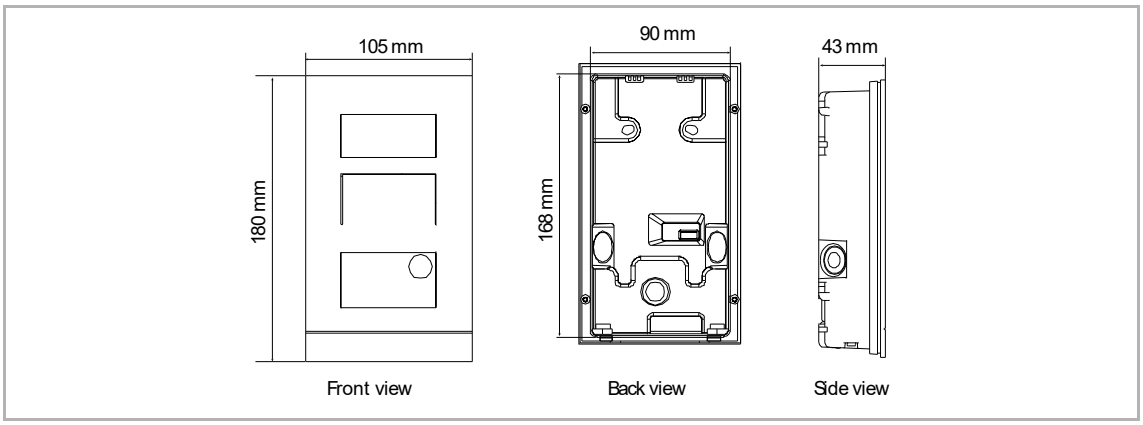

Fig. 9

Installation dimension

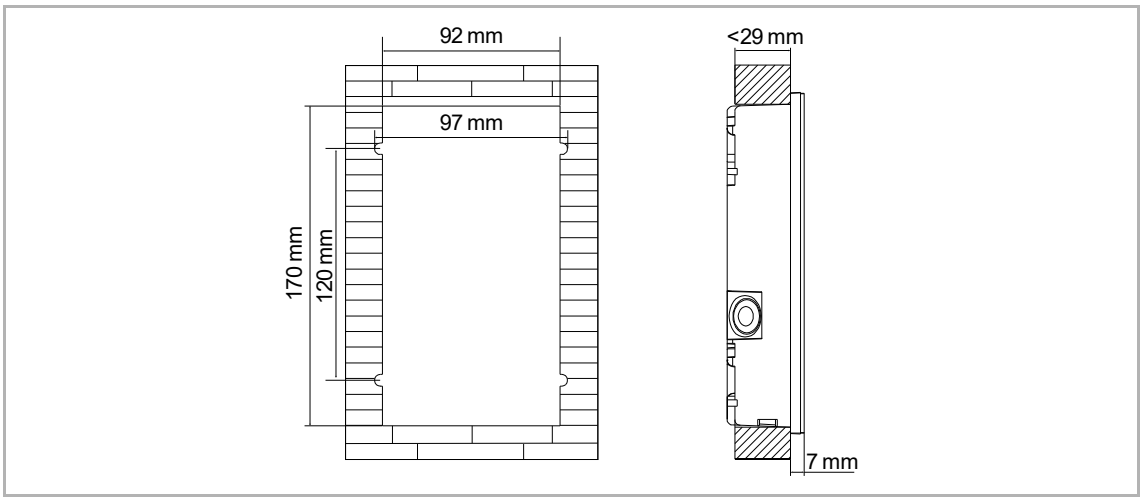

Fig. 10

Cavity wall installation

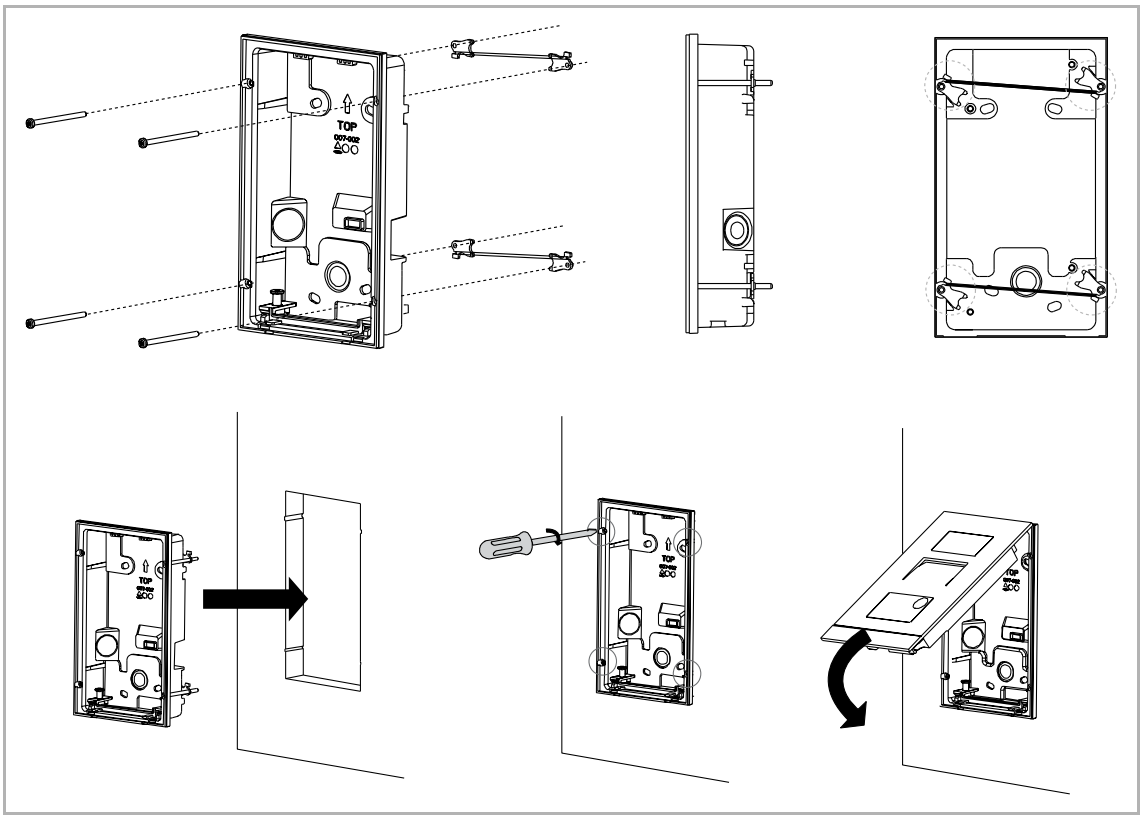

Fig. 11

5.2.5 Dismantling

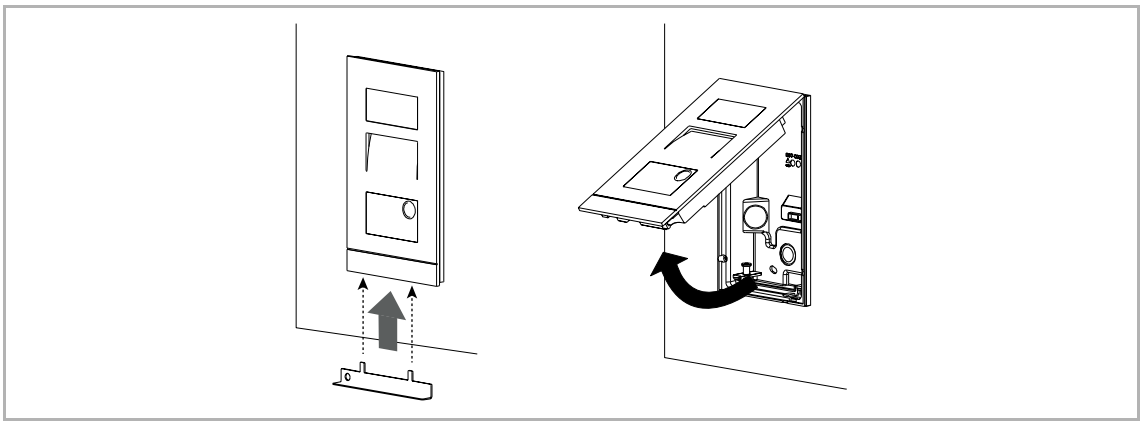

Fig. 12

5.2.6 Replace the nameplate

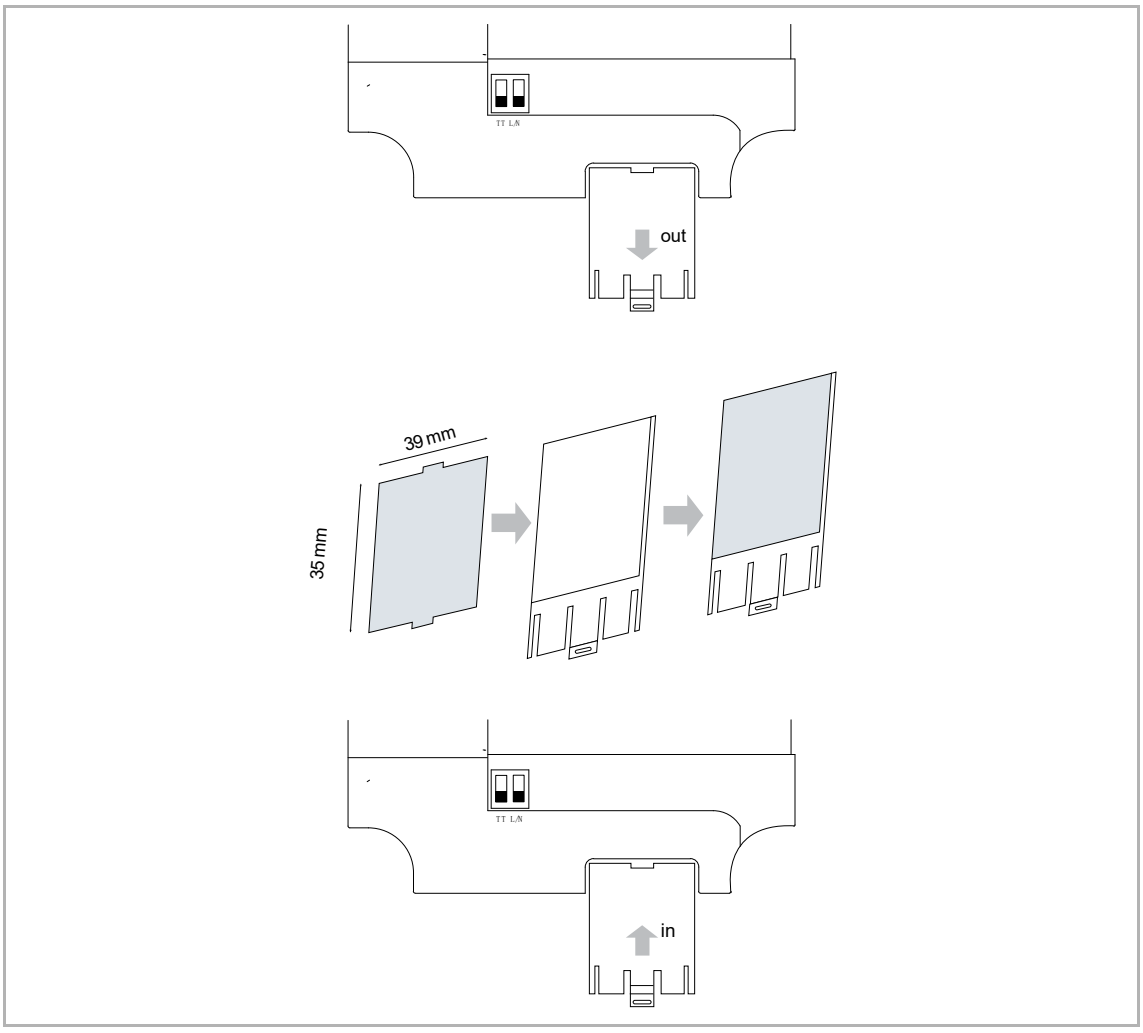

Fig. 13

5.2.7 Installation situations

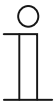

Note

The following installation situations must be avoided without fail to ensure picture quality.

- Direct light
- Direct sunlight
- Extremely bright picture background
- Highly reflective walls on the opposite side of the door station
- Lamps or direct light sources

6 Commissioning

6.1 Configure functions of the 1st/2nd pushbutton

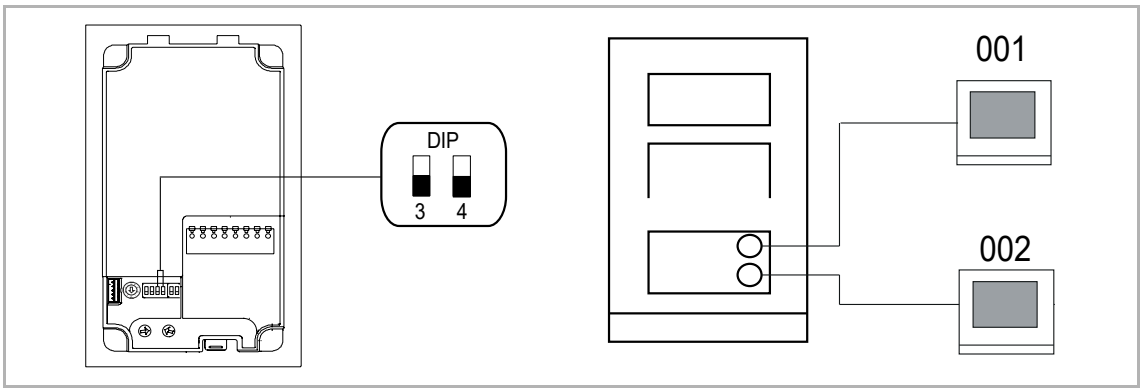

Fig. 14

No	Function
1	3-> OFF, 4-> OFF
2	Call apartment 001
3	Call apartment 002

Tab.5

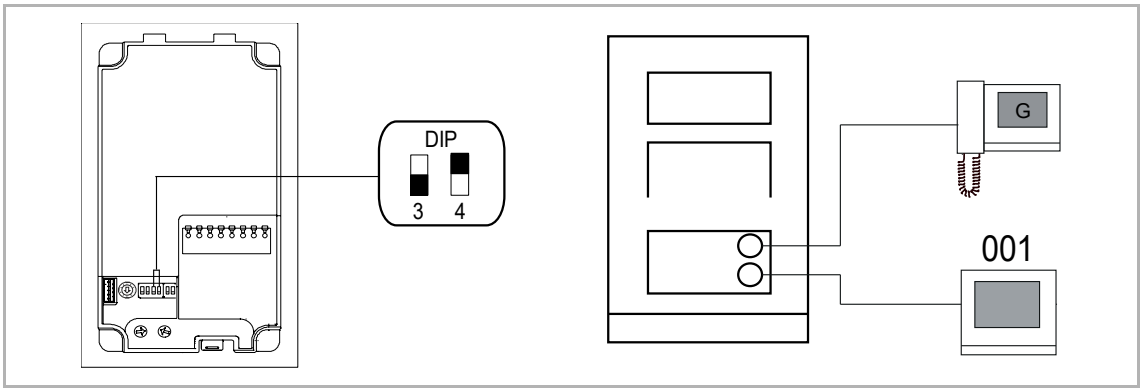

Fig. 15:

No	Function
1	3-> OFF, 4-> ON
2	Call guard unit
3	Call apartment 001

Tab.6

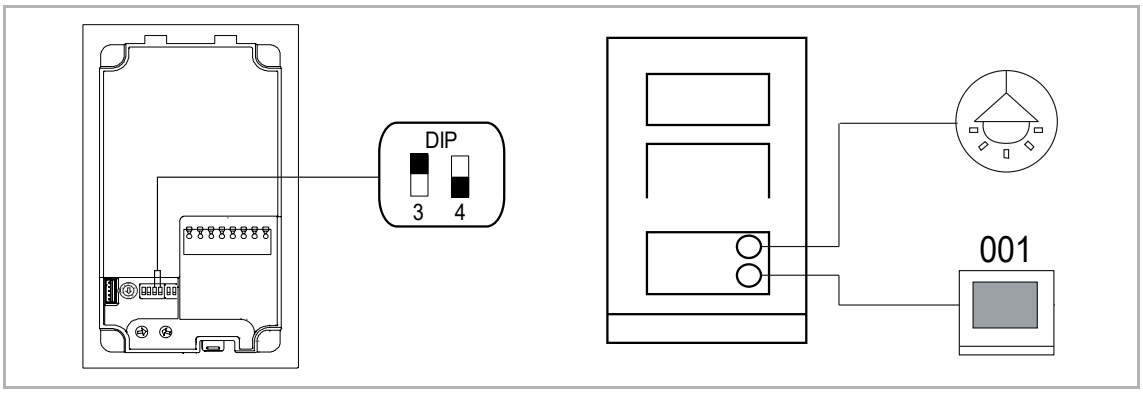

Fig. 16

No	Function
1	3-> ON, 4-> OFF
2	Switch on light
3	Call apartment 001

Tab.7

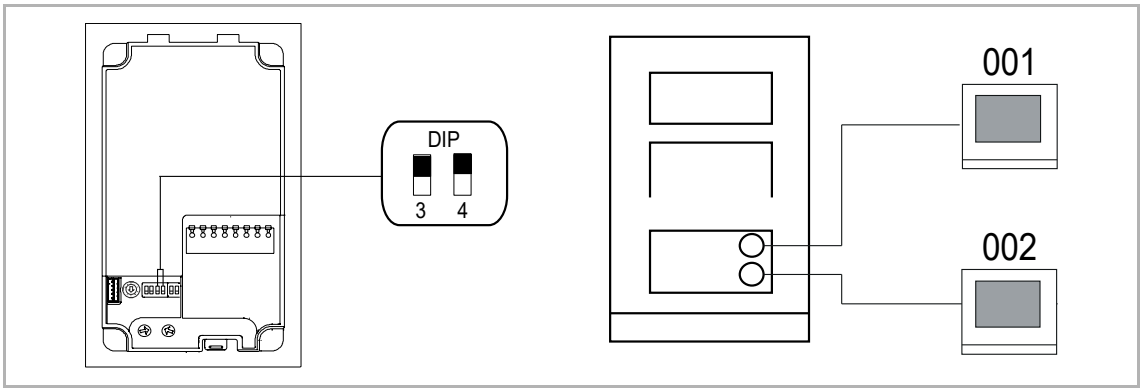

Fig. 17

No	Function
1	3-> ON, 4-> ON
2	Call apartment 001
3	Call apartment 002

Tab.8

6.2 Setting general call function

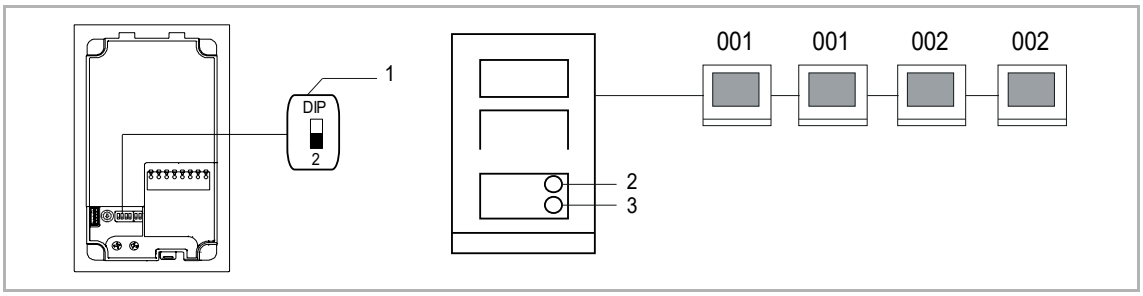

Fig. 18

No	Function
1	2-> OFF
2	Call apartment 001, both 001 indoor stations ring
3	Call apartment 002, both 002 indoor stations ring

Tab.9

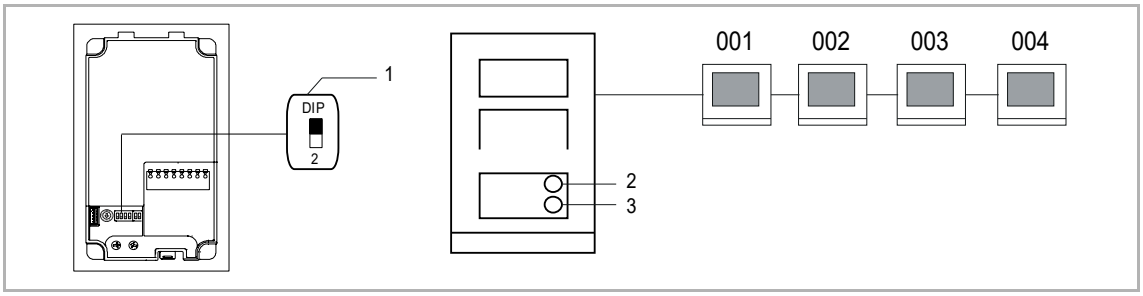

Fig. 19

No	Function
1	2-> ON
2	Call apartment 001, all 4 indoor stations (different address) ring
3	Call apartment 002, all 4 indoor stations (different address) ring

Tab.10

* If the "call forward function" has been set at the indoor station, this function will not work well.

For example, 001IS has set call forward to 002 IS, when press 1st round pushbutton on OS to call 001 IS, if 001 IS doesn't answer the call in 5s, it will not transfer to 002 IS.

7 Operation

7.1 Manage ID cards by mini outdoor station

Programming

Function	Command	Indicated color of door open
Create admin card	Swipe card 1x	Green
Enter settings	Swipe admin card 1x	Orange

Tab.11

The system will take the first card swiped after powering up the system within 60s to be the admin card.

After entering settings, following functionalities can be implemented:

Function	Command	Indicated color of door open
Enroll user	Swipe admin card 1x	Orange flash 1x
	Swipe user card 1x	Green
Delete user	Swipe admin card 2x	Orange flash 2x
	Swipe user card 1x	Green
Enroll new admin	Swipe admin card 3x	Orange flash 3x
	Swipe new admin card 1x	Green
Delete admin	Swipe admin card 4x	Orange flash 4x
	Swipe other admin card 1x	Green
Delete all users	Swipe admin card 5x	Orange flash quickly
	Swipe admin card 1x	Green

Tab.12

During setting, please swipe the same admin card.

Function	Command	Indicated color of door open
Exit settings	Swipe admin card 1x or no cards swiped within 15 seconds	--

Tab.13

Open a door

Function	Command	Indicated color of door open
Open a door	Swipe the enrolled keycard	Green

Tab.14

Reset to factory default

Function	Command	Indicated color of door open
Reset to factory default	Power off the device. Set the OS address to “0” and flip all DIP switches to “OFF”. Power on the device. Within 2 minutes of powering on, press and hold the first button for 3 seconds.	The device will emit a long “di” tone and the Open Door LED will blink red, green and orange repeatedly.

Tab.15

Technical data of ID card

Work frequency	Standard	Support ID card protocol
125KHz	ISO18000-2	EM4100, EM4205, EM4305, EM4450, TK4100, T5567/T5577

Tab.16

Notice

We reserve the right to at all times make technical changes as well as changes to the contents of this document without prior notice.

The detailed specifications agreed to at the time of ordering apply to all orders. ABB accepts no responsibility for possible errors or incompleteness in this document.

We reserve all rights to this document and the topics and illustrations contained therein. The document and its contents, or excerpts thereof, must not be reproduced, transmitted or reused by third parties without prior written consent by ABB.

FCC ID: 2AEBL-M2131

FCC ID: 2AEBL-M2136

This device complies with Part 15 of the FCC Rules. Operation is subject to the following two conditions: (1) this device may not cause harmful interference, and (2) this device must accept any interference received, including interference that may cause undesired operation.

Only operate the device in accordance with the instructions supplied.

Changes or modifications to this unit not expressly approved by the party responsible for compliance could void the user’s authority to operate the equipment.

This device complies with FCC radiation exposure limits set forth for an uncontrolled environment. In order to avoid the possibility of exceeding the FCC radio frequency exposure limits, human proximity to the antenna shall not be less than 20cm (8 inches) during normal operation.

NOTE: This equipment has been tested and found to comply with the limits for a Class B digital device, pursuant to part 15 of the FCC Rules. These limits are designed to provide reasonable protection against harmful interference in a residential installation. This equipment

generates, uses and can radiate radio frequency energy and, if not installed and used in accordance with the instructions, may cause harmful interference to radio communications. However, there is no guarantee that interference will not occur in a particular installation. If

this equipment does cause harmful interference to radio or television reception, which can be determined by turning the equipment off and on, the user is encouraged to try to correct the interference by one or more of the following measures:

—Reorient or relocate the receiving antenna.

—Increase the separation between the equipment and receiver.

—Connect the equipment into an outlet on a circuit different from that to which the receiver is connected.

—Consult the dealer or an experienced radio/TV technician for help.

Contact us

ABB (United Arab Emirates)
Industries(L.L.C)
P.O.Box 11070 Dubai-UAE
T : +971 4 3147 586
F : +971 4 3401 541

ABB (Turkey) Eletrik San.AS
ABB Elektrik Sanayi AS. Organize Sanayi Bolgesi 2 Cadde
No: 16 Y. Dudullu-Istanbul
T : +90 216 528 2281
F : +90 216 528 2945

ABB (Thailand) Ltd.
161/1 SG Tower, 1st-4th Floor, Soi Mahadlekluang 3, Rajdamri Road, Lumpini, Pathumwan Bangkok 10330, Thailand
T : +66 2 6651 000
F : +66 2 6651 043

ABB (Korea) Ltd.
Oksan Bldg, 10th Fl. 157-33 Samsung-dong, Gangnam-gu, 135-090, Seoul, Korea
T : +82 2 5283 177
F : +82 2 5282 350

ABB Global Marketing - Lebanon
Down Town, Beirut, ebanon
T : +961 1983 724/5
F : +961 1983 723

ABB (India) Ltd.
Plot No.1, Sector-1B,
I.I.E.SIDCUL,
Haridwar-249403.India
T : +91 133 423 5447
F : +91 133 423 5449

ABB Australia Pty Ltd.
601 Blackburn Road
3168, Notting Hill, Victoria,
Australia
T : +61 3 8577 7139
F : +61 3 9545 0415

ABB (Vietnam) Ltd.
Km 9 National Highway 1A ,
Hoang Liet, Hoang Mai, Hanoi,
Vietnam
T : +84 4 3861 1010
F : +84 4 3861 1009

ABB (KSA) Electrical Industries Co. Ltd.
P.O.Box 325841, Riyadh 11371
T : +966 1 1484 5600
F : +966 1 1206 7609

ABB (Russia) Ltd.
3121 Wiring Accessories
30/1 bld.2, Obrucheva str. RU
T : +7 495 777 2220
F : +7 495 777 2220

ABB Malaysia Sdn Bhd
Block A, Level 2, Lot 608, Jalan SS13/IK 47500 Subang Jaya
Selangor
T : +60 3 5628 4888
F : +60 3 5635 8200

ABB (Hong Kong) Ltd.
3 Dai Hei Street, Tai Po Industrial Estate, Tai po, Hong Kong
T : +852 2 9293 912
F : +852 2 9293 505

ABB Pte. Ltd.
2 Ayer Rajah Crescent,
Singapore 139935
T: + 65 6 7765 711
F: + 65 6 7780 222

www.abb.com

Approvals and Compliances

Notice
We reserve the right to at all times make technical changes as well as changes to the contents of this document without prior notice.
The detailed specifications agreed upon apply for orders. ABB accepts no responsibility for possible errors or incompleteness in this document.

We reserve all rights to this document and the topics and illustrations contained therein. The document and its contents, or extracts thereof, must not be reproduced, transmitted or reused by third parties without prior written consent by ABB

Copyright© 2016 ABB
All rights reserved

Power and productivity
for a better world™