# EVM079

## Connecting cable with socket

ADOGH040VAS0015C04

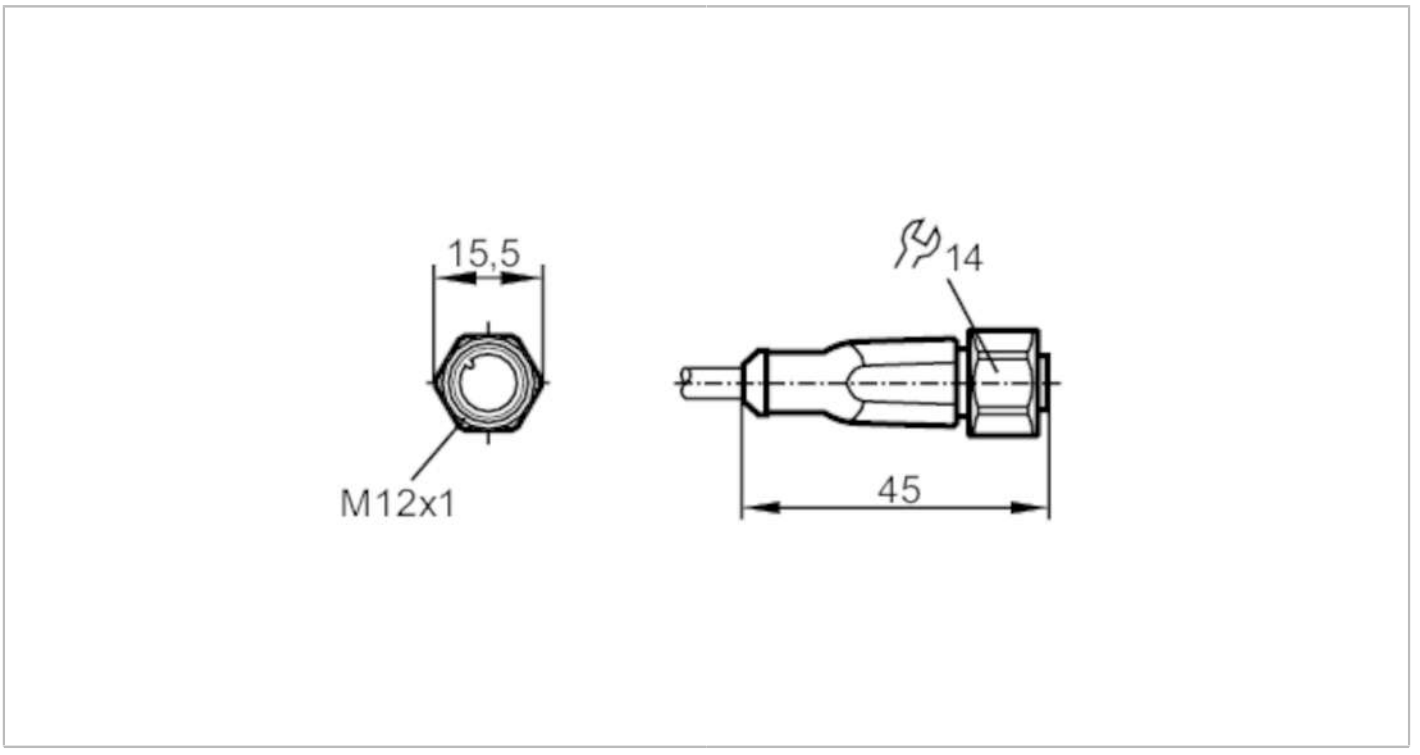


| | | |
|---|---|---|
| **Application** | | |
| Special feature | | Free from silicone; Halogen-free; Gold-plated contacts; Screened cable; Drag chain suitability |
| Application | | applications in particularly harsh environments |
| Free from silicone | | yes |
| **Electrical data** | | |
| Operating voltage | [V] | < 50 AC / < 60 DC |
| Protection class | | II |
| Max. current load total | [A] | 4 |
| **Operating conditions** | | |
| Ambient temperature | [°C] | -40...90 |
| Ambient temperature (moving) | [°C] | -25...90 |
| Protection | | IP 65; IP 67; IP 68; IP 69K |

| | | |
|---|---|---|
| **Tests / approvals** | | |
| Vibration resistance | EN 60068-2-6 Fc | 20 g (10...3000 Hz) / -20 °C / 50 °C |
| | | 50 sweep cycles, 1 octave per minute, in 3 axes |
| Shock resistance | EN 60068-2-27 Ea | 100 g 11 ms half sine; 6 shocks each in every direction along the three coordinate axes / -40 °C / 85 °C |
| Continuous shock resistance | EN 60068-2-29 Eb | 40 g 6 ms; 4000 shocks each in every direction of the 3 coordinate axes / -20 °C / 50 °C |
| Fast temperature change | EN 60068-2-14 Na | TA = -40°C; TB = 85°C; t1 = 30 min; t2 = < 10 s 50 cycles |

# EVM079

## Connecting cable with socket

ADOGH040VAS0015C04

| | | | |
|---|---|---|---|
| Salt spray test | | EN 60068-2-52 Kb | severity level 5 (4 test cycles) |
| **Mechanical data** | | | |
| Weight | [g] | 604.9 | |
| Dimensions | [mm] | 15.5 x 15.5 x 45 | |
| Materials | | housing: TPU orange; Sealing: FKM | |
| Material nut | | stainless steel (1.4404 / 316L) | |
| Drag chain suitability | | yes | |
| Drag chain suitability | | bending radius for flexible use | min. 10 x cable diameter |
| | | travel speed | max. 3.3 m/s for a horizontal travel length of 5 m and max. acceleration of 5 m/s² |
| | | bending cycles | > 2 Mio. |
| | | torsional strain | ± 180 °/m |
| **Remarks** | | | |
| Pack quantity | | 1 pcs. | |

**Electrical connection**

Cable: 15 m, PUR, Halogen-free, black, Ø 4.9 mm, shielded; 4 x 0.34 mm² (42 x Ø 0.1 mm )

**Electrical connection - socket**

Connector: 1 x M12, straight; coding: A; Locking: stainless steel (1.4404 / 316L); Contacts: gold-plated; Tightening torque: 0.6...1.5 Nm; Shielded connection cable: screen not connected

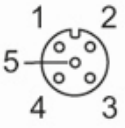


Connection

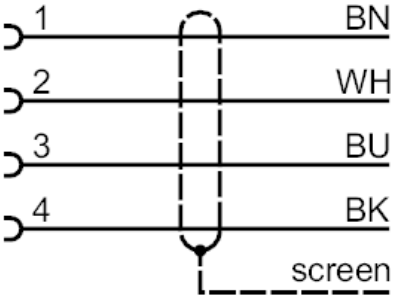

# EVM079

## Connecting cable with socket

**ADOGH040VAS0015C04**

## Diagrams and graphs

characteristic line for derating

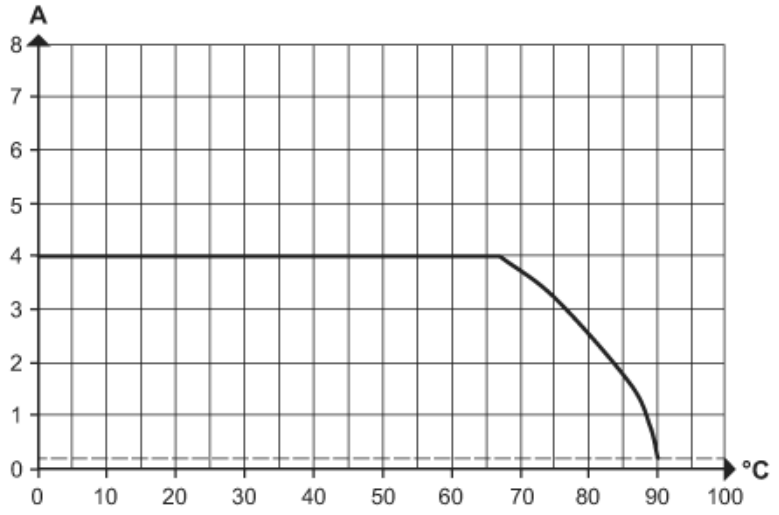


Derating Imax * 0.8 (DIN EN 60512-5-2)

X Ambient temperature [°C]

Y Current [A]