Compact minicylinder - Series 14

Product code: 14N1M10A15

Datasheet creation date: 19/05/2026 09:11

Check the most updated document online *click here*



TECHNICAL DATA

Series	14
Version	N = non magnetic
Operation	1 = single acting
Connection type	M = M5 thread
Diameter (mm)	10
Construction	A = non-threaded smooth piston rod
Stroke (mm)	15

Products designed for industrial applications. General terms and conditions for sale are available on www.camozzi.com.
This document contains a brief description of the products offered by Camozzi Automation at time of publication.
For more complete and up to date information about the Camozzi Automation product range, please refer to our online catalogue at https://shop.camozzi.com

Compact minicylinder - Series 14

Product code: 14N1M10A15

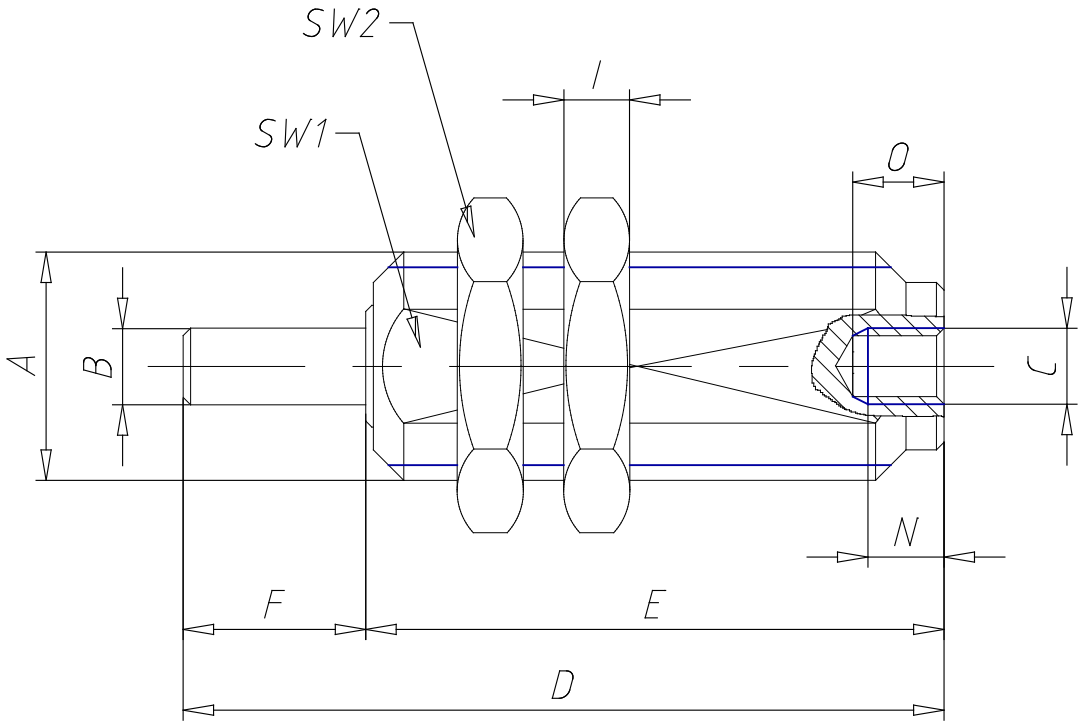

DIMENSIONS

A	M15x1,5
Ø B (mm)	5
C (mm)	4/2
D (mm)	55.0
E (mm)	43.0
F (mm)	12
SW1 (mm)	13
SW2 (mm)	19
I (mm)	4
L	-
M (mm)	10
N (mm)	5
O (mm)	6

Products designed for industrial applications. General terms and conditions for sale are available on www.camozzi.com.
This document contains a brief description of the products offered by Camozzi Automation at time of publication.
For more complete and up to date information about the Camozzi Automation product range, please refer to our online catalogue at https://shop.camozzi.com