OMRON

Miniature Basic Switch

V

Reliable and Safe Basic Switch

- Self-cleaning contacts.
- Best-seller Switches with switching currents of 10 to 21 A.
- Can be used for shutting down current in doors.
- Widely used for operating switches in applications where long life expectancy is required.
- Available in two types of cases: thermoplastic resin and thermosetting resin.
- Available with right-angle PCB terminal.
- Conforms to EN61058-1



Ordering Information

■ Model Number Legend

V-□□□-□□□□-□

1 2 3 4 5 6 7 8

1. Ratings
- 21: 21 A
- 16: 16 A
- 15: 15 A
- 11: 11 A
- 10: 10 A

2. Contact Gap
- None: 1 mm (F gap)
- G: 0.5 mm (G gap) (for remodelling)

3. Actuator
- None: Pin plunger
- 1: Short hinge lever
- 2: Hinge lever
- 3: Long hinge lever
- 4: Simulated hinge lever
- 5: Short hinge roller lever
- 6: Hinge roller lever

4. Contact Form
- 1: SPDT (COM bottom terminal, double-throw)
- 2: SPST-NC (COM bottom terminal, normally closed)
- 3: SPST-NO (COM bottom terminal, normally open)
- 4: SPDT (COM side terminal, double-throw)
- 5: SPST-NC (COM side terminal, normally closed)
- 6: SPST-NO (COM side terminal, normally open)

5. Terminals
- A: Solder/quick-connect terminal (#187)
- C2: Quick-connect terminal (#187)
- C: Quick-connect terminal (#250)
- B: Screw terminal

6. Barrier (Models with Thermoplastic Case Only)
- None: Without barrier
- R: Right-hand barrier
- L: Left-hand barrier

7. Operating Force max.
- 6: 3.92 N {400 gf}
- 5: 1.96 N {200 gf}
- 4: 0.98 N {100 gf}

Note: These values are for the pin plunger models.

8. Special Purpose
- T: Heat-resistive

■ Combinations of Available Terminals

Terminal				Thermoplastic case				Thermosetting case			
			Model	V-21	V-16		V-11	V-15		V-10	
			Rated current	21 A	16 A		11 A	15 A		10 A	
COM terminal position	Insulation barrier	Heat resistance	Terminal symbol / OF	3.92 N {400 gf}	3.92 N {400 gf}	1.96 N {200 gf}	0.98 N {100 gf}	3.92 N {400 gf}	1.96 N {200 gf}	1.96 N {200 gf}	0.98 N {100 gf}
Bottom	No	Standard (80°C)	Solder/Quick-connect terminal (#187) (A)	---	Semi-standard	Standard	Standard	Semi-standard	Standard	Standard	Standard
			Quick-connect terminal (#187) (C2)	---	Semi-standard	Standard	Standard	Semi-standard	Standard	Standard	Standard
			Quick-connect terminal (#250) (C)	Standard	Semi-standard	Standard	Standard	Semi-standard	Semi-standard	Semi-standard	Semi-standard
			Screw terminal (B)	---	---	---	---	Semi-standard	Standard	Standard	Standard
		Heat resistant (150°C)	Solder/Quick-connect terminal (#187) (A)	---	---	---	---	Semi-standard	Standard	Standard	Standard
			Quick-connect terminal (#187) (C2)	---	---	---	---	Semi-standard	Semi-standard	Semi-standard	Semi-standard
			Quick-connect terminal (#250) (C)	---	---	---	---	---	---	---	---
			Screw terminal (B)	---	---	---	---	---	---	---	---
	Yes	Standard (80°C)	Solder/Quick-connect terminal (#187) (A)	---	Semi-standard	Standard	---	---	---	---	---
			Quick-connect terminal (#187) (C2)	---	Semi-standard	Standard	---	---	---	---	---
			Quick-connect terminal (#250) (C)	Standard	Semi-standard	Standard	---	---	---	---	---
Side	No	Standard (80°C)	Solder/Quick-connect terminal (#187) (A)	---	---	---	---	Semi-standard	Standard	Standard	Standard
			Quick-connect terminal (#187) (C2)	---	---	---	---	Semi-standard	Semi-standard	Semi-standard	Semi-standard
			Quick-connect terminal (#250) (C)	Semi-standard	---	---	---	---	---	---	---

Consult OMRON for standard approvals of models.

■ List of Models

General-purpose Models

(Only standard combinations of terminal availability are shown.)

Thermoplastic Case

Actuator	COM terminal position	Contact form	Terminals (see note)	21 A (OF: 3.92 N {400 gf})		
				Without barrier 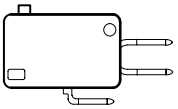	Right-hand barrier 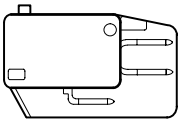	Left-hand barrier 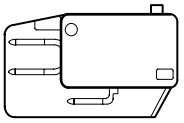
Pin plunger	Bottom	SPDT	C	V-21-1C6	V-21-1CR6	V-21-1CL6
		SPST-NC	C	V-21-2C6	V-21-2CR6	V-21-2CL6
		SPST-NO	C	V-21-3C6	V-21-3CR6	V-21-3CL6
Short hinge lever 	Bottom	SPDT	C	V-211-1C6	V-211-1CR6	V-211-1CL6
Hinge lever 	Bottom	SPDT	C	V-212-1C6	V-212-1CR6	V-212-1CL6
Long hinge lever 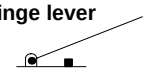	Bottom	SPDT	C	V-213-1C6	V-213-1CR6	V-213-1CL6
Simulated hinge lever 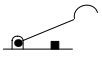	Bottom	SPDT	C	V-214-1C6	V-214-1CR6	V-214-1CL6
Short hinge roller lever 	Bottom	SPDT	C	V-215-1C6	V-215-1CR6	V-215-1CL6
Hinge roller lever 	Bottom	SPDT	C	V-216-1C6	V-216-1CR6	V-216-1CL6

Note: C: Quick-connect terminals (#250)

Actuator	COM terminal position	Contact form	Terminals (see note)	16 A (OF: 1.96 N {200 gf})		
				Without barrier 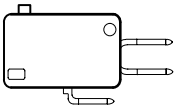	Right-hand barrier 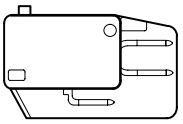	Left-hand barrier 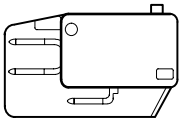
Pin plunger	Bottom	SPDT	A	V-16-1A5	V-16-1AR5	V-16-1AL5
			C2	V-16-1C25	V-16-1C2R5	V-16-1C2L5
			C	V-16-1C5	---	---
		SPST-NC	A	V-16-2A5	V-16-2AR5	V-16-2AL5
			C2	V-16-2C25	V-16-2C2R5	V-16-2C2L5
			C	V-16-2C5	---	---
		SPST-NO	A	V-16-3A5	V-16-3AR5	V-16-3AL5
			C2	V-16-3C25	V-16-3C2R5	V-16-3C2L5
			C	V-16-3C5	---	---
Short hinge lever 	Bottom	SPDT	A	V-161-1A5	V-161-1AR5	V-161-1AL5
			C2	V-161-1C25	V-161-1C2R5	V-161-1C2L5
			C	V-161-1C5	---	---
Hinge lever 	Bottom	SPDT	A	V-162-1A5	V-162-1AR5	V-162-1AL5
			C2	V-162-1C25	V-162-1C2R5	V-162-1C2L5
			C	V-162-1C5	---	---
Long hinge lever 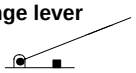	Bottom	SPDT	A	V-163-1A5	V-163-1AR5	V-163-1AL5
			C2	V-163-1C25	V-163-1C2R5	V-163-1C2L5
			C	V-163-1C5	---	---
Simulated hinge lever 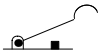	Bottom	SPDT	A	V-164-1A5	V-164-1AR5	V-164-1AL5
			C2	V-164-1C25	V-164-1C2R5	V-164-1C2L5
			C	V-164-1C5	---	---
Short hinge roller lever 	Bottom	SPDT	A	V-165-1A5	V-165-1AR5	V-165-1AL5
			C2	V-165-1C25	V-165-1C2R5	V-165-1C2L5
			C	V-165-1C5	---	---
Hinge roller lever 	Bottom	SPDT	A	V-166-1A5	V-166-1AR5	V-166-1AL5
			C2	V-166-1C25	V-166-1C2R5	V-166-1C2L5
			C	V-166-1C5	---	---

Note: A: Solder/quick-connect terminals (#187)
C2: Quick-connect terminals (#187)
C: Quick-connect terminals (#250)

Actuator	COM terminal position	Contact form	Terminals (see note)	11 A
				OF: 0.98 N {100 gf}
Pin plunger 	Bottom	SPDT	A	V-11-1A4
			C2	V-11-1C24
			C	V-11-1C4
Short hinge lever 	Bottom	SPDT	A	V-111-1A4
			C2	V-111-1C24
			C	V-111-1C4
Hinge lever 	Bottom	SPDT	A	V-112-1A4
			C2	V-112-1C24
			C	V-112-1C4
Long hinge lever 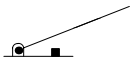	Bottom	SPDT	A	V-113-1A4
			C2	V-113-1C24
			C	V-113-1C4
Simulated hinge lever 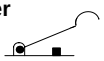	Bottom	SPDT	A	V-114-1A4
			C2	V-114-1C24
			C	V-114-1C4
Short hinge roller lever 	Bottom	SPDT	A	V-115-1A4
			C2	V-115-1C24
			C	V-115-1C4
Hinge roller lever 	Bottom	SPDT	A	V-116-1A4
			C2	V-116-1C24
			C	V-116-1C4

Note: A: Solder/quick-connect terminals (#187)
C2: Quick-connect terminals (#187)
C: Quick-connect terminals (#250)

Thermosetting Case

Actuator	COM terminal position	Contact form	Terminals (see note 2)	15 A	10 A	
				OF: 1.96 N {200 gf}	OF: 1.96 N {200 gf}	OF: 0.98 N {100 gf}
Pin plunger 	Bottom	SPDT	A	V-15-1A5	V-10-1A5	V-10-1A4
			C2	V-15-1C25	V-10-1C25	V-10-1C24
			B	V-15-1B5	V-10-1B5	V-10-1B4
	Bottom	SPST-NC	A	V-15-2A5	V-10-2A5	V-10-2A4
			C2	V-15-2C25	V-10-2C25	V-10-2C24
			B	V-15-2B5	V-10-2B5	V-10-2B4
	Bottom	SPST-NO	A	V-15-3A5	V-10-3A5	V-10-3A4
			C2	V-15-3C25	V-10-3C25	V-10-3C24
			B	V-15-3B5	V-10-3B5	V-10-3B4
	Side	SPDT	A	V-15-4A5	V-10-4A5	V-10-4A4
		SPST-NC	A	V-15-5A5	V-10-5A5	V-10-5A4
		SPST-NO	A	V-15-6A5	V-10-6A5	V-10-6A4
Short hinge lever 	Bottom	SPDT	A	V-151-1A5	V-101-1A5	V-101-1A4
			C2	V-151-1C25	V-101-1C25	V-101-1C24
			B	V-151-1B5	V-101-1B5	V-101-1B4
Hinge lever 	Bottom	SPDT	A	V-152-1A5	V-102-1A5	V-102-1A4
			C2	V-152-1C25	V-102-1C25	V-102-1C24
			B	V-152-1B5	V-102-1B5	V-102-1B4
Long hinge lever 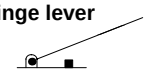	Bottom	SPDT	A	V-153-1A5	V-103-1A5	V-103-1A4
			C2	V-153-1C25	V-103-1C25	V-103-1C24
			B	V-153-1B5	V-103-1B5	V-103-1B4
Simulated hinge lever 	Bottom	SPDT	A	V-154-1A5	V-104-1A5	V-104-1A4
			C2	V-154-1C25	V-104-1C25	V-104-1C24
			B	V-154-1B5	V-104-1B5	V-104-1B4
Short hinge roller lever 	Bottom	SPDT	A	V-155-1A5	V-105-1A5	V-105-1A4
			C2	V-155-1C25	V-105-1C25	V-105-1C24
			B	V-155-1B5	V-105-1B5	V-105-1B4
Hinge roller lever 	Bottom	SPDT	A	V-156-1A5	V-106-1A5	V-106-1A4
			C2	V-156-1C25	V-106-1C25	V-106-1C24
			B	V-156-1B5	V-106-1B5	V-106-1B4

Note: 1. A: Solder/quick-connect terminals (#187)
C2: Quick-connect terminals (#187)
B: Screw terminals

2. OF values shown in the table are for the pin plunger models.

Heat Resistant Models (Up to 150°C)

Actuator	COM terminal position	Contact specifications	Terminal specification	15 A	10 A
				OF: 1.96 N {200 gf}	OF: 0.98 N {100 gf}
Pin plunger	Bottom	SPDT	Solder/Quick-connect terminal (#187) (A)	V-15-1A5-T	V-10-1A4-T
Short hinge lever				V-151-1A5-T	V-101-1A4-T
Hinge lever				V-152-1A5-T	V-102-1A4-T
Long hinge lever				V-153-1A5-T	V-103-1A4-T
Simulated hinge lever				V-154-1A5-T	V-104-1A4-T
Short hinge roller lever				V-155-1A5-T	V-105-1A4-T
Hinge roller lever				V-156-1A5-T	V-106-1A4-T

■ Barrier (V-21 and V-16 Models Only)

Right-hand Barrier

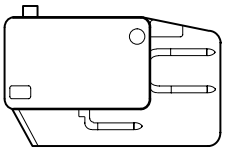

Left-hand Barrier

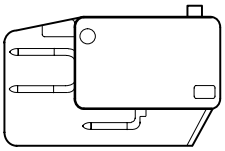

Specifications

■ Ratings

Type	Rated voltage	Non-inductive load				Inductive laod			
		Resistive load		Lamp load		Inductive load		Motor load	
		NC	NO	NC	NO	NC	NO	NC	NO
V-21	250 VAC	21 A		3 A		12 A		4 A	
	8 VDC	21 A		5 A		12 A		7 A	
	30 VDC	14 A		5 A		12 A		5 A	
	125 VDC	0.6 A		0.1 A		0.6 A		0.1 A	
	250 VDC	0.3 A		0.05 A		0.3 A		0.05 A	
V-16	250 VAC	16 A		2 A		10 A		3 A	
	8 VDC	16 A		4 A		10 A		6 A	
	30 VDC	10 A		4 A		10 A		4 A	
	125 VDC	0.6 A		0.1 A		0.6 A		0.1 A	
	250 VDC	0.3 A		0.05 A		0.3 A		0.05 A	
V-15	250 VAC	15 A		2 A		10 A		3 A	
	8 VDC	15 A		4 A		10 A		6 A	
	30 VDC	10 A		4 A		10 A		4 A	
	125 VDC	0.6 A		0.1 A		0.6 A		0.1 A	
	250 VDC	0.3 A		0.05 A		0.3 A		0.05 A	
V-11	250 VAC	11 A		1.5 A		6 A		2 A	
	8 VDC	11 A		3 A		6 A		3 A	
	30 VDC	6 A		3 A		6 A		3 A	
	125 VDC	0.6 A		0.1 A		0.6 A		0.1 A	
	250 VDC	0.3 A		0.05 A		0.3 A		0.05 A	
V-10	250 VAC	10 A		1.5 A		6 A		2 A	
	8 VDC	10 A		3 A		6 A		3 A	
	30 VDC	6 A		3 A		6 A		3 A	
	125 VDC	0.6 A		0.1 A		0.6 A		0.1 A	
	250 VDC	0.3 A		0.05 A		0.3 A		0.05 A	

Note:
1. The above current values are the normal current values of models with a contact gap of 1 mm (gap F), which vary with the normal current values of models with a contact gap of 0.5 mm (gap G).
2. Inductive load has a power factor of 0.4 min. (AC) and a time constant of 7 ms max. (DC).
3. Lamp load has an inrush current of 10 times the steady-state current.
4. Motor load has an inrush current of 6 times the steady-state current.
5. The ratings values apply under the following test conditions:
   Ambient temperature: 20±2°C
   Ambient humidity: 65±5%
   Operating frequency: 60 operations/min

■ Characteristics

Operating speed	0.1 mm to 1 m/s (at pin plunger models)
Operating frequency	Mechanical: 600 operations/min Electrical: 60 operations/min
Insulation resistance	100 MΩ min. (at 500 VDC)
Contact resistance	15 mΩ max. (initial value)
Dielectric strength	1,000 VAC, 50/60 Hz for 1 min between terminals of the same polarity
	V-21, V-16, and V-11 models: 2,000 VAC, 50/60 Hz for 1 min between current-carrying metal parts and ground, and between each terminal and non-current-carrying metal parts (see note 1)
	V-15 and V-10 models: 1,500 VAC, 50/60 Hz for 1 min between current-carrying metal parts and ground, and between each terminal and non-current-carrying metal parts (see note 1)
Vibration resistance (see note 2)	Malfunction: 10 to 55 Hz, 1.5-mm double amplitude
Shock resistance (see note 2)	Destruction: 1,000 m/s^2 {approx. 100G} max. Malfunction: V-21/V-16/V-15: 300 m/s^2 {approx. 30G} max. V-11/V-10: 200 m/s^2 {approx. 20G} max.
Life expectancy (see note 3)	Mechanical: 50,000,000 operations min. Electrical: V-21/V-16/V-15: 100,000 operations min. (V-15 heat resistive: 20,000 operation min.) V-11/V-10: 300,000 operations min. (V-10 heat resistive: 50,000 operation min.)
Degree of protection	IP00
Degree of protection against electric shock	Class I
Proof tracking index (PTI)	175
Switch category	D (IEC335-1)
Ambient temperature	Operating: –25°C to 80°C (with no icing) –25°C to 150°C for heat-resistive model (with no icing)
Ambient humidity	Operating: 85% max. (for 5°C to 35°C)
Weight	Approx. 6.2 g (pin plunger model)

Note: 1. The dielectric strength values shown in the table are for models with a Separator.

2. For the pin plunger models, the above values apply for use at both the free position and total travel position. For the lever models, they apply at the total travel position.

3. For testing conditions, contact your OMRON sales representative.

■ Approved Standards

UL1054 (File No. E41515) CSA C22.2 No.55 (File No. LR21642) (Standard Ratings Only is listed.)

Rated voltage	V-21	V-16	V-15	V-11	V-10
125 VAC	21 A, 1/2 HP	16 A, 1/2 HP	15 A, 1/2 HP	11 A, 1/2 HP	10 A, 1/2 HP
250 VAC	21 A, 1/2 HP	16 A, 1/2 HP	15 A, 1/2 HP	11 A, 1/2 HP	10 A, 1/2 HP
125 VDC	0.6 A	0.6 A	0.6 A	0.6 A	0.6 A
250 VDC	0.3 A	0.3 A	0.3 A	0.3 A	0.3 A

VDE 0630 (File No. 6162ÜG), SEV (File No. 96. 550868. 01) DEMKO

Rated voltage	V-21	V-16	V-11
250 VAC	20 (4) A	16 (3) A	11 (2) A

Testing conditions: 50,000 operations, T105 (0°C to 105°C)

SEMKO EN61058-1 (File No. 9403007)

Rated voltage	V-16	V-11
250 VAC	16 (3) A	11 (2) A

Testing conditions: 5E4 (50,000 operations), T105 (0°C to 105°C)

TÜV Rheinland EN61058-1 (File No. T9451451)

Rated voltage	V-15	V-10
250 VAC	15 A	10 A
250 VDC	0.3 A	0.3 A

Testing conditions: 5E4 (50,000 operations), T105 (0°C to 105°C)

■ Contact Specifications

Item		V-21	V-16	V-15	V-11	V-10
Contact	Specification	Rivet				
	Material	Silver alloy			Silver	
	Gap (standard value)	1 mm (F gap) or 0.5 mm (G gap)				
Inrush current	NC	50 A max.	40 A max.	36 A max.	24 A max.	
	NO					

■ Contact Form

Terminal type	SPDT	SPST-NC	SPST-NO
Bottom terminal	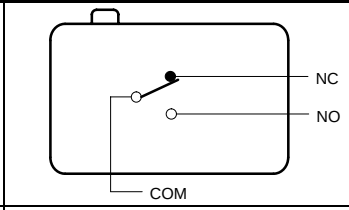	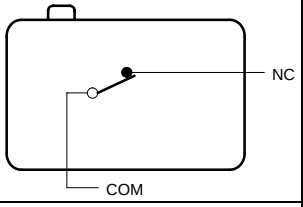	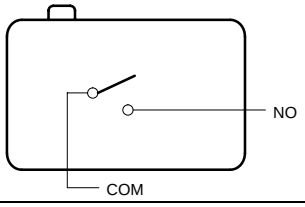
Side terminal	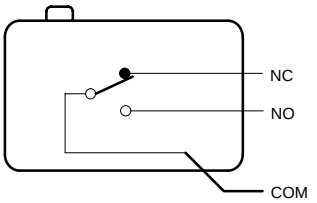	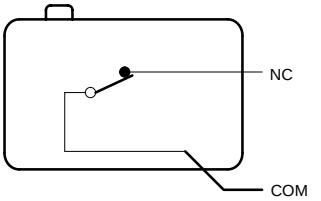	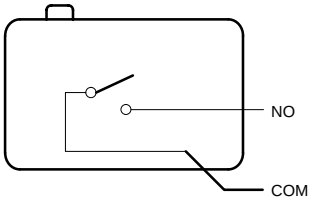

Engineering Data

Mechanical Life Expectancy (Pin Plunger)

V-21/-16/-15/-10

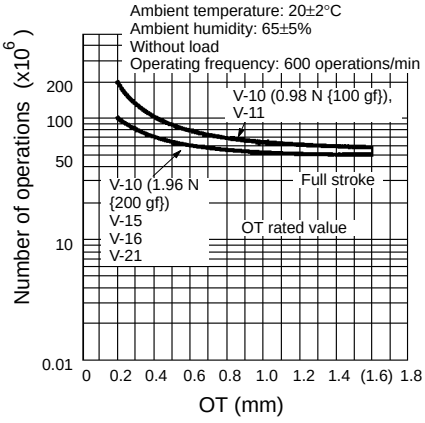

Electrical Life Expectancy

V-21/-16/-15

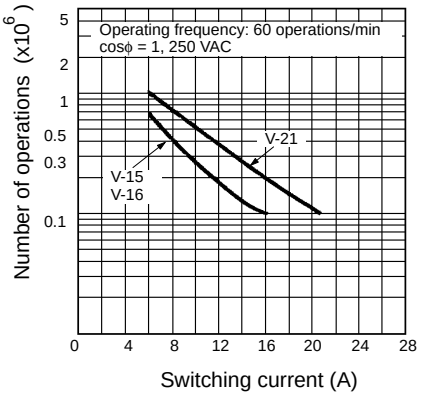

V-11/-10

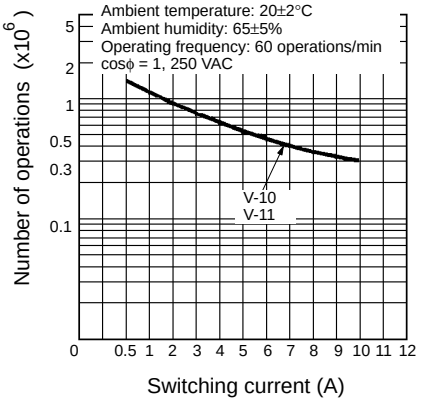

Dimensions

■ Terminals

Terminal type	Solder/Quick-connect Terminal (#187) (A)	Quick-connect Terminal (#187) (C2)	Quick-connect Terminal (#250) (C)
COM bottom position	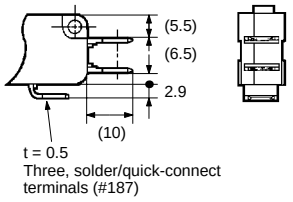	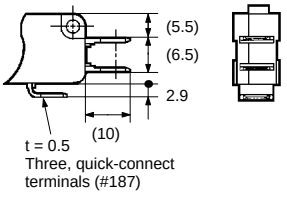	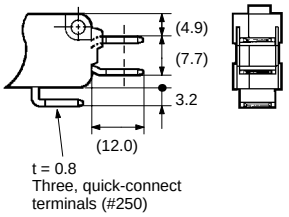
COM side position	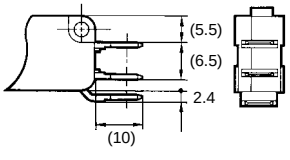	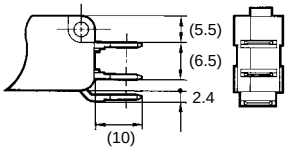	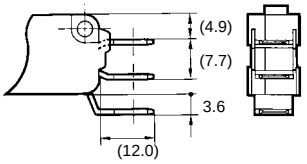
Terminal dimensions	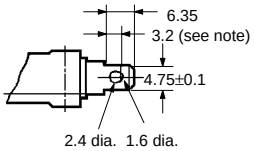 **Note:** Indicates the length to the center of the 1.6-dia. holes	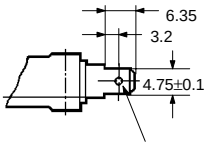 1.6-dia. terminal hole	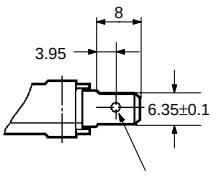 1.65-dia. terminal hole

Terminal type	Screw Terminal (B)
Bottom	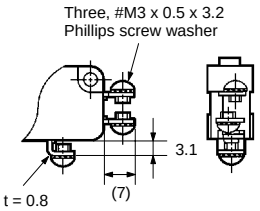

Note: 1. The above is for the SPDT contact specifications. Two terminals will be available for SPST-NO or SPST-NC contact specifications. For terminal positions, refer to the above *Contact Form.*

2. Right-angle PCB terminal type is available
D5 type: Pins at right angles, to the right.
D6 type: Pins at right angles, to the left.
Drawings will be provided if requested.

■ Dimensions and Operating Characteristics

Note: 1. Unless otherwise specified, a tolerance of ±0.4 mm applies to all dimensions.

2. The following illustrations and drawings are for quick-connect terminals (#250) (terminals C). V models with a switching current of 16 A or 11 A incorporates terminals A and C2. These models are different from #250 models in terminal size only. Terminals A, C2, and side common terminals are omitted from the following drawings. Refer to *Kinds of Terminals* on page 85 for these terminals.

3. The □ in the model number is for the terminal code.

Pin Plunger

(Without Barrier)

V-21-1□6
V-16-1□5
V-11-1□4

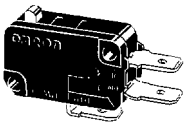

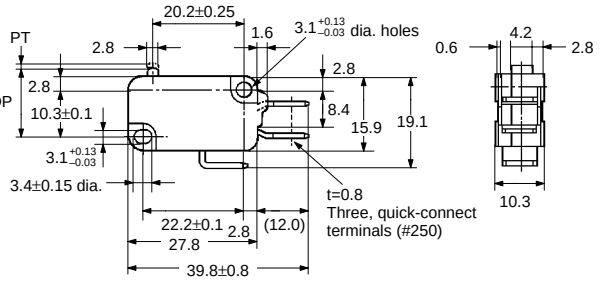

Model	V-21-1□6	V-16-1□5
OF max.	3.92 N {400 gf}	1.96 N {200 gf}
RF min.	0.78 N {80 gf}	0.49 N {50 gf}
PT max.	1.2 mm	
OT min.	1.0 mm	
MD max.	0.4 mm	
OP	14.7±0.4 mm	

(With Right-hand Barrier)

V-21-1□R6
V-16-1□R5

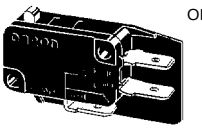

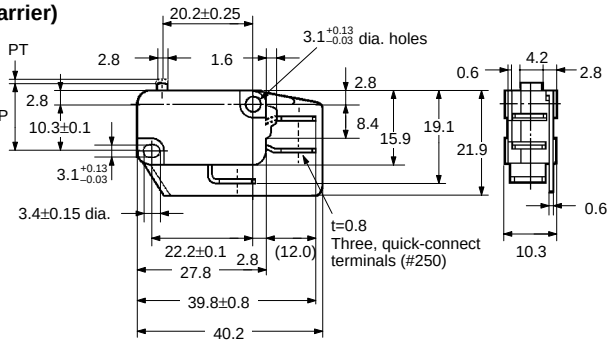

Model	V-11-1□4
OF max.	0.98 N {100 gf}
RF min.	0.20 N {20 gf}
PT max.	1.2 mm
OT min.	1.0 mm
MD max.	0.4 mm
OP	14.7±0.4 mm

(With Left-hand Barrier)

V-21-1□L6
V-16-1□L5

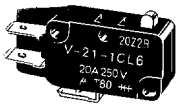

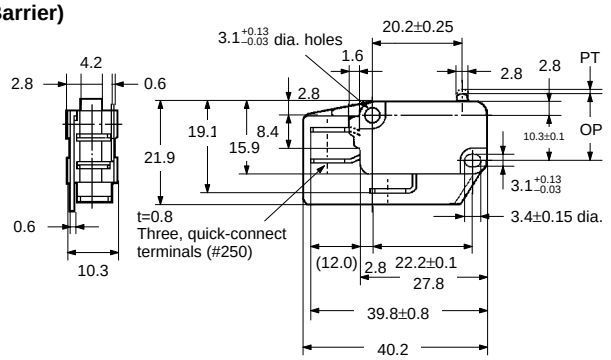

Short Hinge Lever

V-211-1□6
V-161-1□5
V-111-1□4

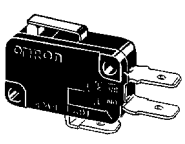

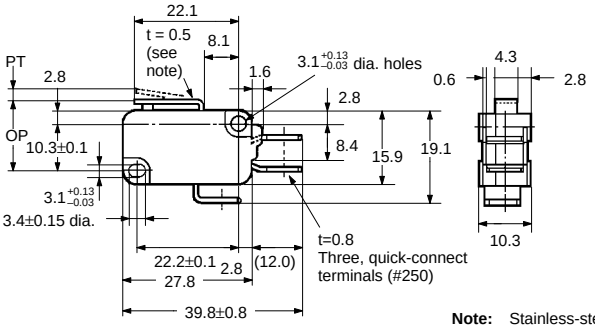

Note: Stainless-steel lever

Model	V-211-1□6	V-161-1□5
OF max.	3.92 N {400 gf}	1.96 N {200 gf}
RF min.	0.49 N {50 gf}	0.49 N {50 gf}
PT max.	1.6 mm	
OT min.	0.8 mm	
MD max.	0.6 mm	
OP	15.2±0.5 mm	

Model	V-111-1□4
OF max.	0.98 N {100 gf}
RF min.	0.15 N {15 gf}
PT max.	1.6 mm
OT min.	0.8 mm
MD max.	0.6 mm
OP	15.2±0.5 mm

Hinge Lever

V-212-1□6
V-162-1□5
V-112-1□4

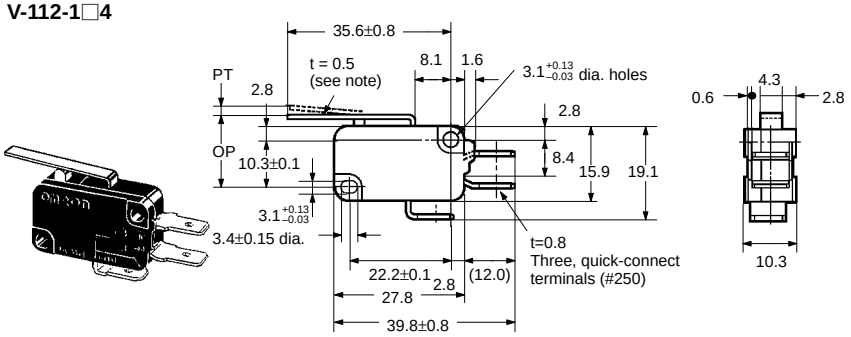

Note: Stainless-steel lever

Model	V-212-1□6	V-162-1□5
OF max.	2.45 N {250 gf}	1.23 N {125 gf}
RF min.	0.25 N {25 gf}	0.14 N {14 gf}
PT max.	4.0 mm	
OT min.	1.6 mm	
MD max.	1.5 mm	
OP	15.2±1.2 mm	

Model	V-112-1□4
OF max.	0.59 N {60 gf}
RF min.	0.06 N {6 gf}
PT max.	4.0 mm
OT min.	1.6 mm
MD max.	1.5 mm
OP	15.2±0.5 mm

Long Hinge Lever

V-213-1□6
V-163-1□5
V-113-1□4

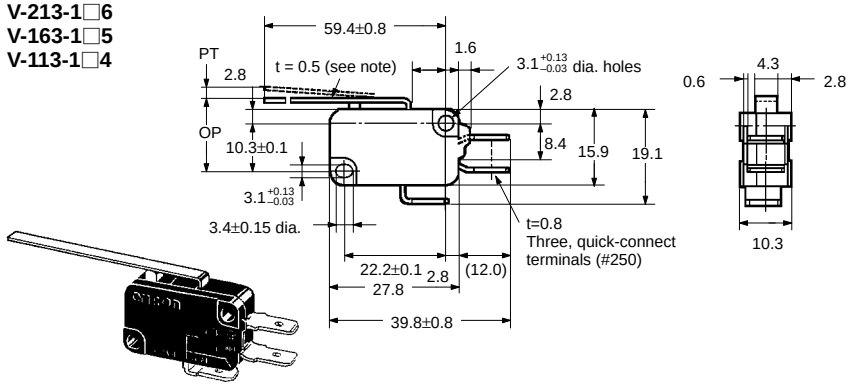

Note: Stainless-steel lever

Model	V-213-1□6	V-163-1□5
OF max.	1.27 N {130 gf}	0.69 N {70 gf}
RF min.	0.12 N {12 gf}	0.06 N {6 gf}
PT max.	9.0 mm	
OT min.	2.0 mm	
MD max.	2.8 mm	
OP	15.2± +2.6 −3.2 mm	

Model	V-113-1□4
OF max.	0.34 N {35 gf}
RF min.	---
PT max.	9.0 mm
OT min.	3.2 mm
MD max.	2.8 mm
OP	15.2±2.6 mm

Simulated Hinge Lever

V-214-1□6
V-164-1□5
V-114-1□4

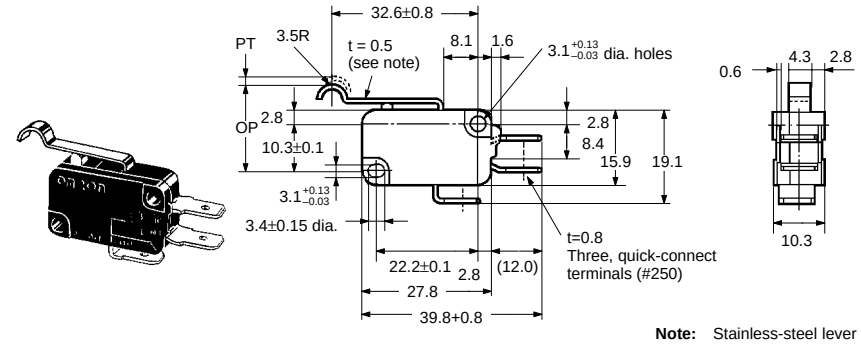

Note: Stainless-steel lever

Model	V-214-1□6	V-164-1□5
OF max.	2.45 N {250 gf}	1.23 N {125 gf}
RF min.	0.25 N {25 gf}	0.14 N {14 gf}
PT max.	4.0 mm	
OT min.	1.6 mm	
MD max.	1.5 mm	
OP	18.7±1.2 mm	

Model	V-114-1□4
OF max.	0.59 N {60 gf}
RF min.	0.06 N {6 gf}
PT max.	4.0 mm
OT min.	1.6 mm
MD max.	1.5 mm
OP	18.7±1.2 mm

Short Hinge Roller Lever

V-215-1□6
V-165-1□5
V-115-1□4

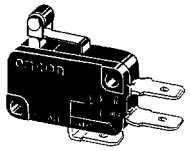

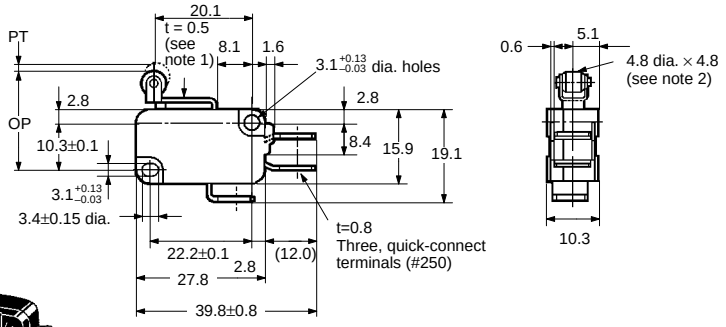

Note: 1. Stainless-steel lever
2. Oilless polyacetar resin roller

Model	V-215-1□6	V-165-1□5
OF max.	4.71 N {480 gf}	2.35 N {240 gf}
RF min.	0.49 N {50 gf}	0.49 N {50 gf}
PT max.	1.6 mm	
OT min.	0.8 mm	
MD max.	0.6 mm	
OP	20.7±0.6 mm	

Model	V-115-1□4
OF max.	1.18 N {120 gf}
RF min.	0.15 N {15 gf}
PT max.	1.6 mm
OT min.	0.8 mm
MD max.	0.6 mm
OP	20.7±0.6 mm

Hinge Roller Lever

V-216-1□6
V-166-1□5
V-116-1□4

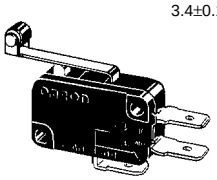

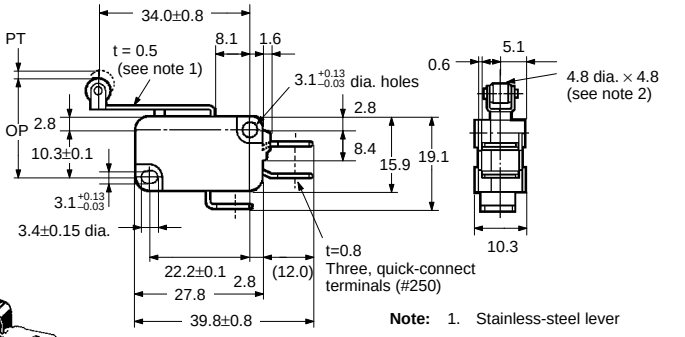

Note: 1. Stainless-steel lever
2. Oilless polyacetar resin roller

Model	V-216-1□6	V-166-1□5
OF max.	2.45 N {250 gf}	1.23 N {125 gf}
RF min.	0.25 N {25 gf}	0.14 N {14 gf}
PT max.	4.0 mm	
OT min.	1.6 mm	
MD max.	1.5 mm	
OP	20.7±1.2 mm	

Model	V-116-1□4
OF max.	0.59 N {60 gf}
RF min.	0.06 N {6 gf}
PT max.	4.0 mm
OT min.	1.6 mm
MD max.	1.5 mm
OP	20.7±1.2 mm

■ Thermosetting Case (V-15/-10 Models)

The following illustration and drawing are for solder and quick-connect terminals (#187) (terminals A). V models with a switching current of 15 A or 10 A incorporate terminals B or C2. These models are different from #187 models in terminal size only.
Refer to *Terminals* on page 85 for these terminals.

Pin Plunger

V-15-1□5
V-10-1□5
V-10-1□4

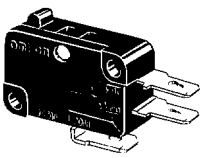

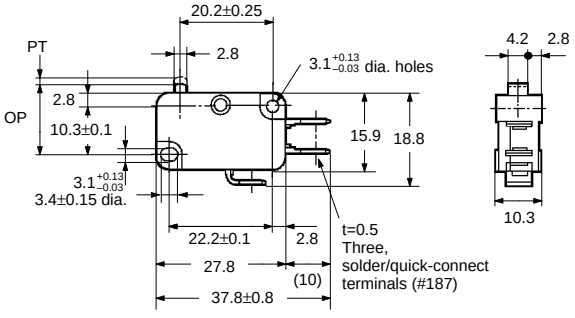

Model	V-15-1□5 V-10-1□5	V-10-1□4
OF max.	1.96 N {200 gf}	0.98 N {100 gf}
RF min.	0.49 N {50 gf}	0.20 N {20 gf}
PT max.	1.2 mm	
OT min.	1.0 mm	
MD max.	0.4 mm	
OP	14.7±0.4 mm	

Short Hinge Lever

V-151-1□5
V-101-1□5
V-101-1□4

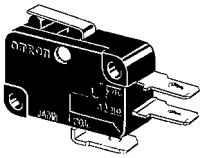

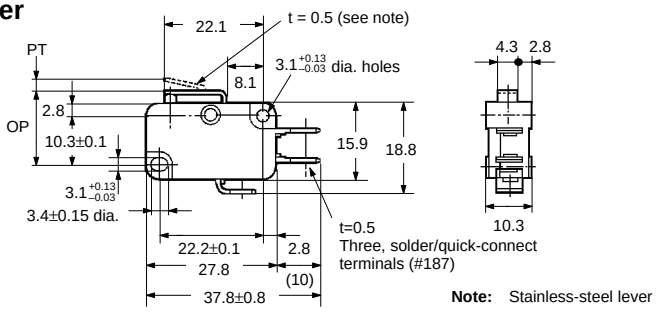

Note: Stainless-steel lever

Model	V-151-1□5 V-101-1□5	V-101-1□4
OF max.	1.96 N {200 gf}	0.98 N {100 gf}
RF min.	0.49 N {50 gf}	0.15 N {15 gf}
PT max.	1.6 mm	
OT min.	0.8 mm	
MD max.	0.6 mm	
OP	15.2±0.5 mm	

Hinge Lever

V-152-1□5
V-102-1□5
V-102-1□4

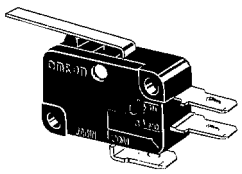

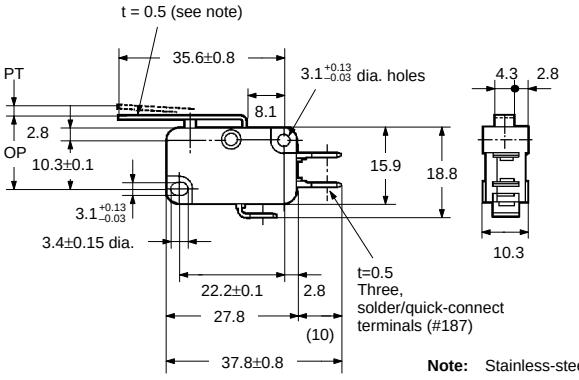

Note: Stainless-steel lever

Model	V-152-1□5 V-102-1□5	V-102-1□4
OF max.	1.23 N {125 gf}	0.59 N {60 gf}
RF min.	0.14 N {14 gf}	0.06 N {6 gf}
PT max.	4.0 mm	
OT min.	1.6 mm	
MD max.	1.5 mm	
OP	15.2±1.2 mm	

Long Hinge Lever

V-153-1□5
V-103-1□5
V-103-1□4

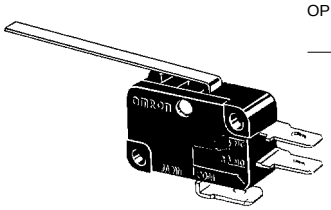

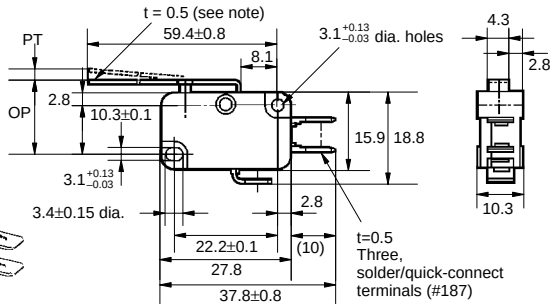

Note: Stainless-steel lever

Model	V-153-1□5 V-103-1□5	V-101-1□4
OF max.	0.69 N {70 gf}	0.34 N {35 gf}
RF min.	0.06 N {6 gf}	---
PT max.	9.0 mm	
OT min.	2.0 mm	3.2 mm
MD max.	2.8 mm	
OP	15.2± +2.6 −3.2 mm	15.2±2.6 mm

Simulated Hinge Lever

V-154-1□5
V-104-1□5
V-104-1□4

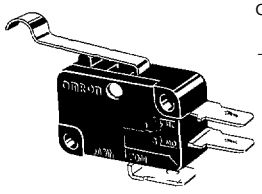

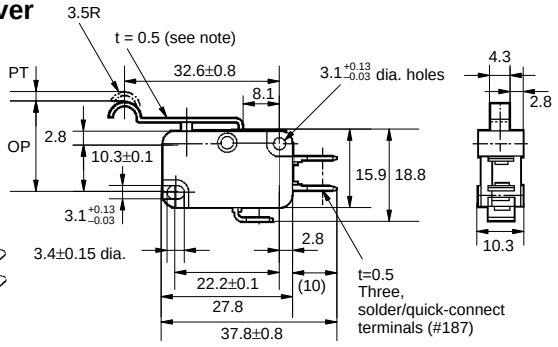

Note: Stainless-steel lever

Model	V-154-1□5 V-104-1□5	V-104-1□4
OF max.	1.23 N {125 gf}	0.59 N {60 gf}
RF min.	0.14 N {14 gf}	0.06 N {6 gf}
PT max.	4.0 mm	
OT min.	1.6 mm	
MD max.	1.5 mm	
OP	18.7±1.2 mm	

Short Hinge Roller Lever

V-155-1□5
V-105-1□5
V-105-1□4

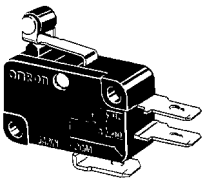

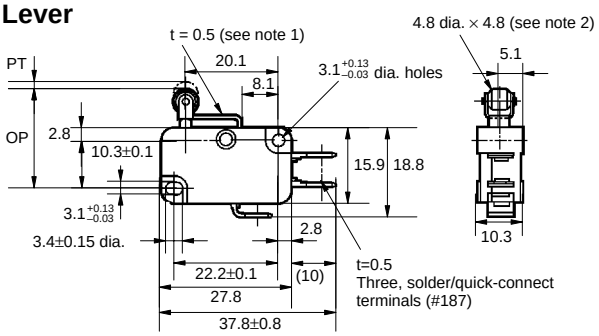

Model	V-155-1□5 V-105-1□5	V-105-1□4
OF max.	2.35 N {240 gf}	1.18 N {120 gf}
RF min.	0.49 N {50 gf}	0.15 N {15 gf}
PT max.	1.6 mm	
OT min.	0.8 mm	
MD max.	0.6 mm	
OP	20.7±0.6 mm	

Note: 1. Stainless-steel lever
2. Oilless polyacetar resin roller

Hinge Roller Lever

V-156-1□5
V-106-1□5
V-106-1□4

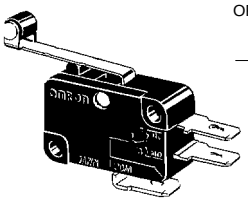

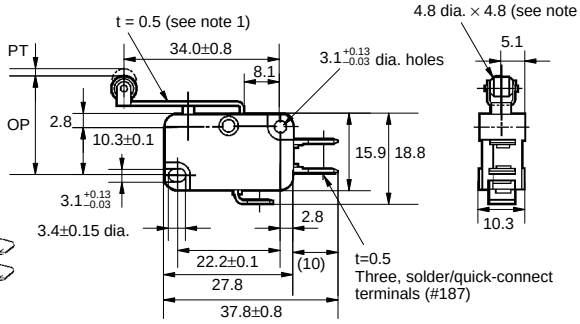

Model	V-156-1□5 V-106-1□5	V-106-1□4
OF max.	1.23 N {125 gf}	0.59 N {60 gf}
RF min.	0.14 N {14 gf}	0.06 N {6 gf}
PT max.	4.0 mm	
OT min.	1.6 mm	
MD max.	1.5 mm	
OP	20.7±1.2 mm	

Note: 1. Stainless-steel lever
2. Oilless polyacetar resin roller

Precautions

■ Mounting Dimensions

Use two M3 mounting screws with an appropriate screwdriver to mount the switch. Tighten the screws to a torque of 0.39 to 0.59 N • m {4 to 6 kgf • cm}.

Mounting Holes

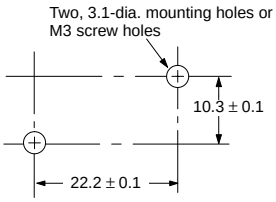

■ Correct Use

Refer to pages 22 to 29 for common precautions.

Specifications Approved by TÜV Rheinland According to EN61058-1

Appropriate Cable Size (mm^2)

Model	Solder terminal	Screw terminal
V-10	0.75, 1.25, 2.0	0.75, 1.25
V-15	1.25, 2.0	1.25

Terminal Connection

Use M3 crimp terminals for connecting to the screw terminals.

Appropriate tightening torque: 0.39 to 0.59 N • m (4 to 6 kgf • cm)

Insulation Distance

According to EN61058-1, the minimum insulation thickness for this Switch should be 1.1 mm and minimum clearance distance between the terminal and mounting plate should be 1.9 mm. If the insulation distance cannot be provided in the product incorporating the Switch, either use a Switch with insulation barrier or use a Separator to ensure sufficient insulation distance.

Solder Terminal Approval Conditions

Soldering iron can be used. Soldering hook hole available.
Soldering terminal types 1 and 2 are met.

■ Connector

Refer to Terminal Connectors on page 214.

■ Actuator (Sold Separately)

Various Actuators are available as shown on pages 111 to 113.

ALL DIMENSIONS SHOWN ARE IN MILLIMETERS.
To convert millimeters into inches, multiply by 0.03937. To convert grams into ounces, multiply by 0.03527.

Cat. No. B010-E1-9