DATASHEET - DILM750/22(RA250)



Contactor, 380 V 400 V 400 kW, 2 N/O, 2 NC, RA 250: 110 - 250 V 40 - 60 Hz/110 - 350 V DC, AC and DC operation, Screw connection

Powering Business Worldwide™

Part no.	**DILM750/22(RA250)**
Catalog No.	**208222**
Alternate Catalog No.	**XTCE750N22A**
EL-Nummer (Norway)	**4134089**

Delivery program

Product range			Contactors
Application			Contactors for Motors
Subrange			Comfort devices greater than 170 A
Utilization category			AC-1: Non-inductive or slightly inductive loads, resistance furnaces NAC-3: Normal AC induction motors: starting, switch off during running AC-4: Normal AC induction motors: starting, plugging, reversing, inching
Connection technique			Screw connection
Rated operational current			
AC-3			
380 V 400 V	I_e	A	750
AC-1			
Conventional free air thermal current, 3 pole, 50 - 60 Hz			
Open			
at 40 °C	$I_{th} = I_e$	A	1102
Conventional free air thermal current, 1 pole			
open	I_{th}	A	2250
Max. rating for three-phase motors, 50 - 60 Hz			
AC-3			
220 V 230 V	P	kW	240
380 V 400 V	P	kW	400
660 V 690 V	P	kW	720
1000 V	P	kW	800
AC-4			
220 V 230 V	P	kW	181
380 V 400 V	P	kW	315
660 V 690 V	P	kW	556
1000 V	P	kW	678
Contact sequence			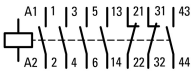
Can be combined with auxiliary contact			DILM820-XHI…
Actuating voltage			RA 250: 110 - 250 V 40 - 60 Hz/110 - 350 V DC
Voltage AC/DC			AC and DC operation
Contacts			
N/O = Normally open			2 N/O
N/C = Normally closed			2 NC
Auxiliary contacts			
possible variants at auxiliary contact module fitting options			on the side: 2 x DILM820-XHI11(V)-SI; 2 x DILM820-XHI11-SA
Side mounting auxiliary contacts			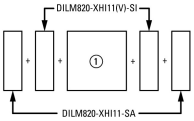
Instructions			Interlocked opposing contacts according to IEC/EN 60947-5-1 Appendix L, inside the auxiliary contact module Auxiliary contacts used as mirror contacts according to IEC/EN 60947-4-1 Appendix F (not N/C late open)
Instructions			integrated suppressor circuit in actuating electronics

			660 V, 690 V or 1000 V: not directly reversing

Technical data

General

Standards			IEC/EN 60947, VDE 0660, UL, CSA
Lifespan, mechanical			
AC operated	Operations	x 10^6	5
DC operated	Operations	x 10^6	5
Operating frequency, mechanical			
AC operated	Operations/h		1000
DC operated	Operations/h		1000
Climatic proofing			Damp heat, constant, to IEC 60068-2-78 Damp heat, cyclic, to IEC 60068-2-30
Ambient temperature			
Open		°C	-40 - +60
Enclosed		°C	- 40 - + 40
Storage		°C	- 40 - + 80
Mounting position			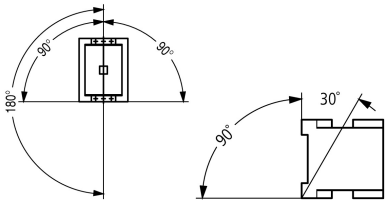
Mechanical shock resistance (IEC/EN 60068-2-27)			
Half-sinusoidal shock, 10 ms			
Main contacts			
N/O contact		g	10
Auxiliary contacts			
N/O contact		g	10
N/C contact		g	8
Degree of Protection			IP00
Protection against direct contact when actuated from front (EN 50274)			Finger and back-of-hand proof with terminal shroud or terminal block
Altitude		m	Max. 2000
Weight			
AC operated		kg	16.52
DC operated		kg	16.52
Weight		kg	16.52
Terminal capacity main cable			
Flexible with cable lug		mm^2	50 - 240
Stranded with cable lug		mm^2	70 - 240
Solid or stranded		AWG	2/0 - 500 MCM
Flat conductor	Lamellenzahl x Breite x Dicke	mm	Fixing with flat cable terminal or cable terminal blocks See terminal capacity for cable terminal blocks
Busbar	Width	mm	60
Main cable connection screw/bolt			M12
Tightening torque		Nm	35
Terminal capacity control circuit cables			
Solid		mm^2	1 x (0.75 - 2.5) 2 x (0.75 - 2.5)
Flexible with ferrule		mm^2	1 x (0.75 - 2.5) 2 x (0.75 - 2.5)
Solid or stranded		AWG	18 - 14
Control circuit cable connection screw/bolt			M3.5
Tightening torque		Nm	1.2
Tool			
Main cable			

Width across flats		mm	18
Control circuit cables			
Pozidriv screwdriver		Size	2

Main conducting paths

Rated impulse withstand voltage	U_{imp}	V AC	8000
Overvoltage category/pollution degree			III/3
Rated insulation voltage	U_i	V AC	1000
Rated operational voltage	U_e	V AC	1000
Safe isolation to EN 61140			
between coil and contacts		V AC	1000
between the contacts		V AC	1000
Making capacity (p.f. to IEC/EN 60947)		A	9840
Breaking capacity			
220 V 230 V		A	8200
380 V 400 V		A	8200
500 V		A	8200
660 V 690 V		A	8200
1000 V		A	5800
Component lifespan			
			AC1: See → Engineering, characteristic curves AC3: See → Engineering, characteristic curves AC4: See → Engineering, characteristic curves
Short-circuit rating			
Short-circuit protection maximum fuse			
Type “2” coordination			
400 V	gG/gL 500 V	A	630
690 V	gG/gL 690 V	A	630
1000 V	gG/gL 1000 V	A	630
Type “1” coordination			
400 V	gG/gL 500 V	A	1200
690 V	gG/gL 690 V	A	1200
1000 V	gG/gL 1000 V	A	800

AC

AC-1			
Rated operational current			
Conventional free air thermal current, 3 pole, 50 - 60 Hz			
Open			
at 40 °C	$I_{th} = I_e$	A	1102
at 50 °C	$I_{th} = I_e$	A	986
at 55 °C	$I_{th} = I_e$	A	940
at 60 °C	$I_{th} = I_e$	A	900
Conventional free air thermal current, 1 pole			
Note			at maximum permissible ambient air temperature
open	I_{th}	A	2250
AC-3			
Rated operational current			
Open, 3-pole: 50 – 60 Hz			
Notes			At maximum permissible ambient temperature (open.)
220 V 230 V	I_e	A	750
240 V	I_e	A	750
380 V 400 V	I_e	A	750
415 V	I_e	A	750
440V	I_e	A	750
500 V	I_e	A	750
660 V 690 V	I_e	A	750

1000 V	I_e	A	580
Motor rating	P	kWh	
220 V 230 V	P	kW	240
240V	P	kW	260
380 V 400 V	P	kW	400
415 V	P	kW	455
440 V	P	kW	480
500 V	P	kW	550
660 V 690 V	P	kW	720
1000 V	P	kW	800
AC-4			
Rated operational current			
Open, 3-pole: 50 – 60 Hz			
220 V 230 V	I_e	A	576
240 V	I_e	A	576
380 V 400 V	I_e	A	576
415 V	I_e	A	576
440 V	I_e	A	576
500 V	I_e	A	576
660 V 690 V	I_e	A	576
1000 V	I_e	A	464
Motor rating	P	kWh	
220 V 230 V	P	kW	181
240 V	P	kW	200
380 V 400 V	P	kW	315
415 V	P	kW	346
440 V	P	kW	367
500 V	P	kW	417
660 V 690 V	P	kW	556
1000 V	P	kW	678

Condensor operation

Individual compensation, rated operational current I_e of three-phase capacitors			
Open			
up to 525 V		A	463
690 V		A	265
Max. inrush current peak		x I_e	30
Component lifespan	Operations	x 10^6	0.1
Max. operating frequency		Ops/h	200

Current heat loss

3 pole, at I_{th} (60°)		W	78
Current heat loss at I_e to AC-3/400 V		W	54
Impedance per pole		mΩ	0.032

Magnet systems

Voltage tolerance			
U_S			110 - 250 V 40-60 Hz 110 - 350 V DC
AC operated	Pick-up		0.7 x $U_{S\ min}$ - 1.15 x $U_{S\ max}$
DC operated	Pick-up		0.7 x $U_{S\ min}$ - 1.15 x $U_{S\ max}$
AC operated	Drop-out		0.2 x $U_{S\ max}$ - 0.6 x $U_{S\ min}$
DC operated	Drop-out		0.2 x $U_{S\ max}$ - 0.6 x $U_{S\ min}$
Power consumption of the coil in a cold state and 1.0 x U_S			
Note on power consumption			Control transformer with $u_k \leqq 7\%$
Pull-in power	Pick-up	VA	800
Pull-in power	Pick-up	W	700
Sealing power	Sealing	VA	26.5

Sealing power	Sealing	W	11.4
Duty factor		% DF	100
Changeover time at 100 % U_S (recommended value)			
Main contacts			
Closing delay		ms	70
Opening delay		ms	110
Behaviour in marginal and transitional conditions			
Sealing			
Voltage interruptions			
(0 … 0.2 x $U_{c\ min}$) ≦ 10 ms			Time is bridged successfully
(0 … 0.2 x $U_{c\ min}$) > 10 ms			Drop-out of the contactor
Voltage drops			
(0.2 … 0.6 x $U_{c\ min}$) ≦ 12 ms			Time is bridged successfully
(0.2 … 0.6 x $U_{c\ min}$) > 12 ms			Drop-out of the contactor
(0.6 … 0.7 x $U_{c\ min}$)			Contactor remains switched on
Excess voltage			
(1.15 … 1.3 x $U_{c\ max}$)			Contactor remains switched on
Pick-up phase			
(0 … 0.7 x $U_{c\ min}$)			Contactor does not switch on
(0.7 x $U_{c\ min}$ … 1.15 x $U_{c\ max}$)			Contactor switches on with certainty
Admissible transitional contact resistance (of the external control circuit device when actuating A11)		mΩ	≦ 500
PLC signal level (A3 - A4) to IEC/EN 61131-2 (type 2)			
High		V	15
Low		V	5

Electromagnetic compatibility (EMC)

Electromagnetic compatibility			This product is designed for operation in industrial environments (environment A). Its use in residential environments (environment B) may cause radio-frequency interference, requiring additional noise suppression measures.

Rating data for approved types

Switching capacity			
Maximum motor rating			
Three-phase			
200 V 208 V		HP	250
230 V 240 V		HP	300
460 V 480 V		HP	600
575 V 600 V		HP	700
General use		A	1102
Auxiliary contacts			
Pilot Duty			
AC operated			A600
DC operated			P300
General Use			
AC		V	600
AC		A	15
DC		V	250
DC		A	1
Short Circuit Current Rating		SCCR	
Basic Rating			
SCCR		kA	42
max. Fuse		A	2000
max. CB		A	1200
480 V High Fault			
SCCR (fuse)		kA	85

max. Fuse		A	2000
SCCR (CB)		kA	85
max. CB		A	1200
600 V High Fault			
SCCR (fuse)		kA	85
max. Fuse		A	2000
SCCR (CB)		kA	85
max. CB		A	1200
Special Purpose Ratings			
Definite Purpose Ratings (100,000 cycles acc. to UL 1995)			
LRA 480V 60Hz 3phase		A	4800
FLA 480V 60Hz 3phase		A	800
LRA 600V 60Hz 3phase		A	4800
FLA 600V 60Hz 3phase		A	800

Design verification as per IEC/EN 61439

Technical data for design verification			
Rated operational current for specified heat dissipation	I_n	A	750
Heat dissipation per pole, current-dependent	P_{vid}	W	18
Equipment heat dissipation, current-dependent	P_{vid}	W	0
Static heat dissipation, non-current-dependent	P_{vs}	W	6.5
Heat dissipation capacity	P_{diss}	W	0
Operating ambient temperature min.		°C	-40
Operating ambient temperature max.		°C	60
IEC/EN 61439 design verification			
10.2 Strength of materials and parts			
10.2.2 Corrosion resistance			Meets the product standard's requirements.
10.2.3.1 Verification of thermal stability of enclosures			Meets the product standard's requirements.
10.2.3.2 Verification of resistance of insulating materials to normal heat			Meets the product standard's requirements.
10.2.3.3 Verification of resistance of insulating materials to abnormal heat and fire due to internal electric effects			Meets the product standard's requirements.
10.2.4 Resistance to ultra-violet (UV) radiation			Meets the product standard's requirements.
10.2.5 Lifting			Does not apply, since the entire switchgear needs to be evaluated.
10.2.6 Mechanical impact			Does not apply, since the entire switchgear needs to be evaluated.
10.2.7 Inscriptions			Meets the product standard's requirements.
10.3 Degree of protection of ASSEMBLIES			Does not apply, since the entire switchgear needs to be evaluated.
10.4 Clearances and creepage distances			Meets the product standard's requirements.
10.5 Protection against electric shock			Does not apply, since the entire switchgear needs to be evaluated.
10.6 Incorporation of switching devices and components			Does not apply, since the entire switchgear needs to be evaluated.
10.7 Internal electrical circuits and connections			Is the panel builder's responsibility.
10.8 Connections for external conductors			Is the panel builder's responsibility.
10.9 Insulation properties			
10.9.2 Power-frequency electric strength			Is the panel builder's responsibility.
10.9.3 Impulse withstand voltage			Is the panel builder's responsibility.
10.9.4 Testing of enclosures made of insulating material			Is the panel builder's responsibility.
10.10 Temperature rise			The panel builder is responsible for the temperature rise calculation. Eaton will provide heat dissipation data for the devices.
10.11 Short-circuit rating			Is the panel builder's responsibility. The specifications for the switchgear must be observed.
10.12 Electromagnetic compatibility			Is the panel builder's responsibility. The specifications for the switchgear must be observed.
10.13 Mechanical function			The device meets the requirements, provided the information in the instruction leaflet (IL) is observed.

Technical data ETIM 8.0

Low-voltage industrial components (EG000017) / Power contactor, AC switching (EC000066)
Electric engineering, automation, process control engineering / Low-voltage switch technology / Contactor (LV) / Power contactor, AC switching (ecl@ss10.0.1-27-37-10-03 [AAB718015])

Rated control supply voltage Us at AC 50HZ	V	110 - 250
Rated control supply voltage Us at AC 60HZ	V	110 - 250
Rated control supply voltage Us at DC	V	110 - 250
Voltage type for actuating		AC/DC
Rated operation current Ie at AC-1, 400 V	A	1102
Rated operation current Ie at AC-3, 400 V	A	750
Rated operation power at AC-3, 400 V	kW	400
Rated operation current Ie at AC-4, 400 V	A	576
Rated operation power at AC-4, 400 V	kW	315
Rated operation power NEMA	kW	447
Modular version		No
Number of auxiliary contacts as normally open contact		2
Number of auxiliary contacts as normally closed contact		2
Type of electrical connection of main circuit		Rail connection
Number of normally closed contacts as main contact		0
Number of normally open contacts as main contact		3

Approvals

Product Standards	IEC/EN 60947-4-1; UL 60947-4-1; CSA - C22.2 No. 60947-4-1-14; CE marking
UL File No.	E29096
UL Category Control No.	NLDX
CSA File No.	012528
CSA Class No.	3211-04
North America Certification	UL listed, CSA certified
Specially designed for North America	No

Characteristics

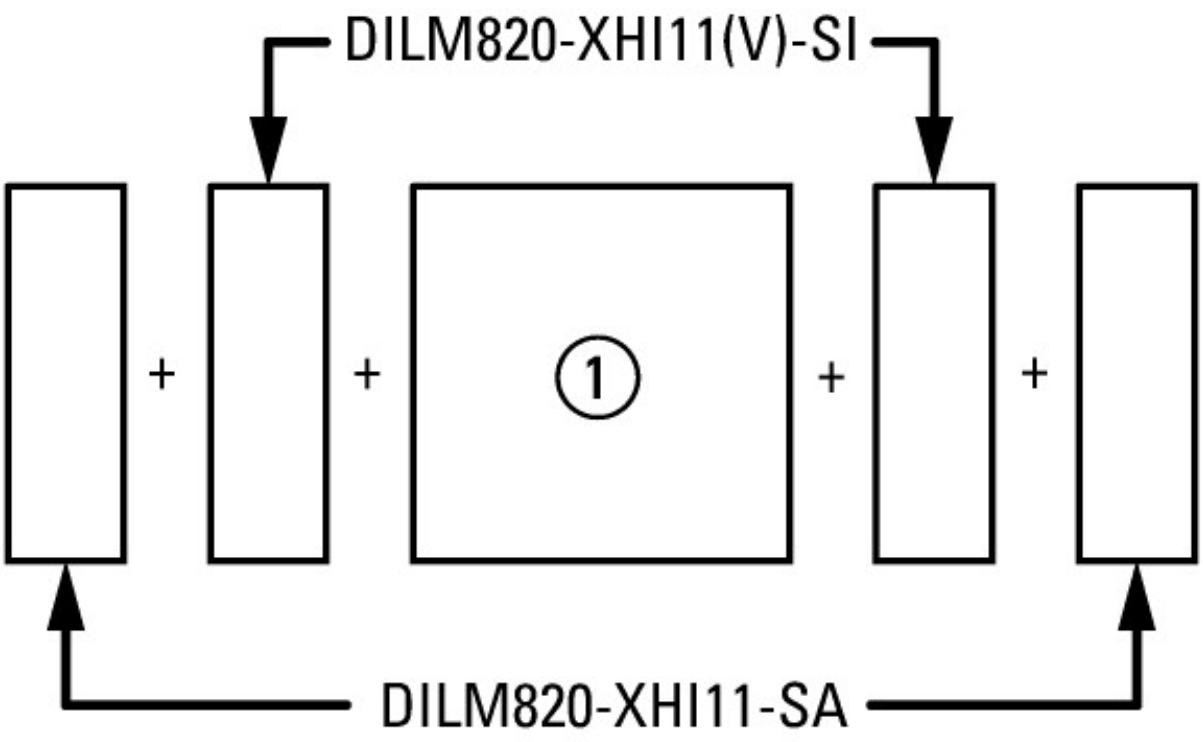

on the side: 2 x DILM820-XHI11(V)-SI; 2 x DILM820-XHI11-SA

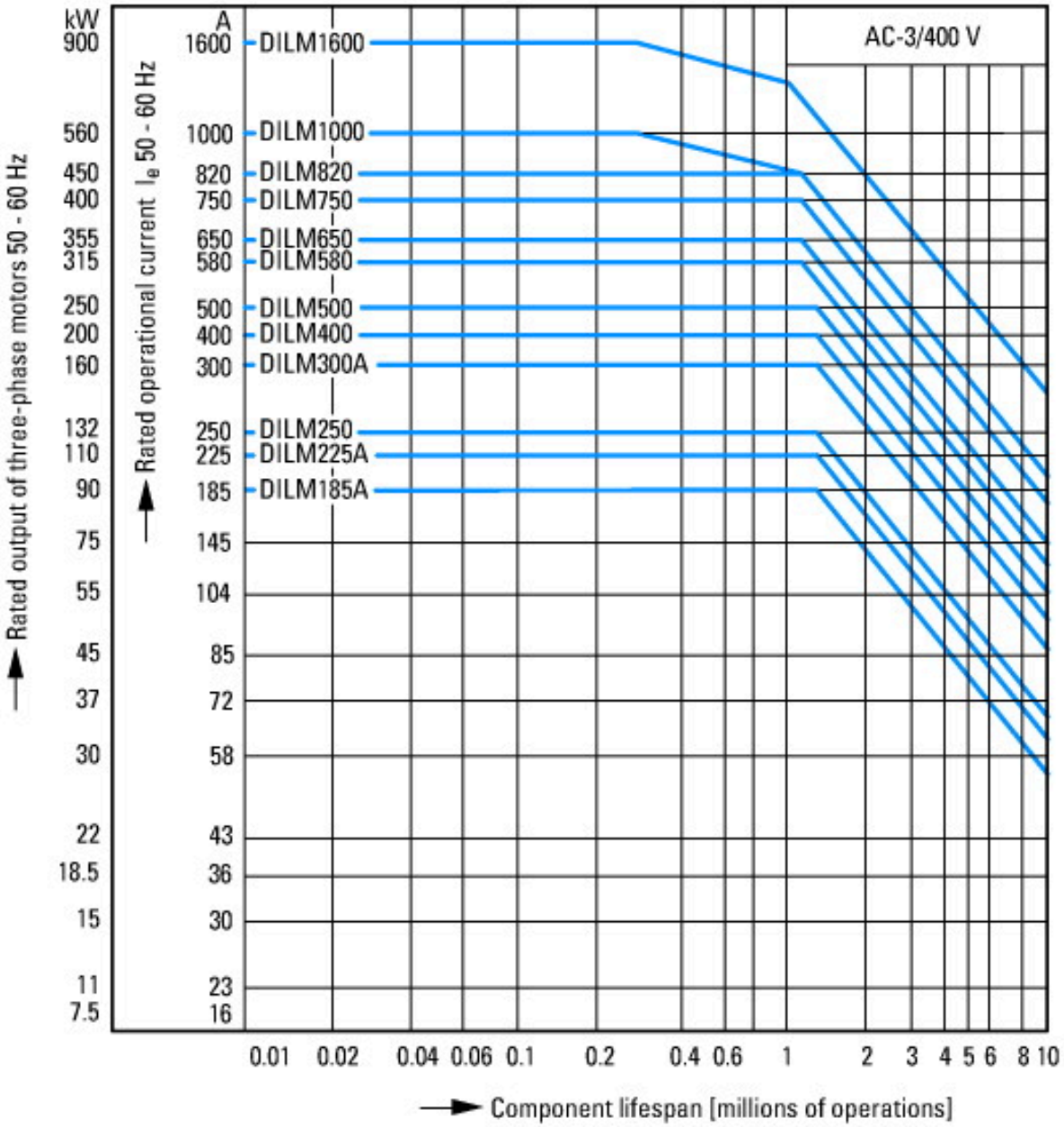

Normal switching duty
Normal AC induction motor
Operating characteristics
Switch on: from stop
Switch off: during run
Electrical characteristics:
Switch on: up to 6 x Rated motor current
Switch off: up to 1 x Rated motor current
Utility category
100 % AC-3
Typical Applications
Compressors
Lifts
Mixers
Pumps
Escalators
Agitators
fan
Conveyor belts
Centrifuges
Hinged flaps
Bucket-elevator
Air-conditioning systems
General drives for manufacturing and processing machines

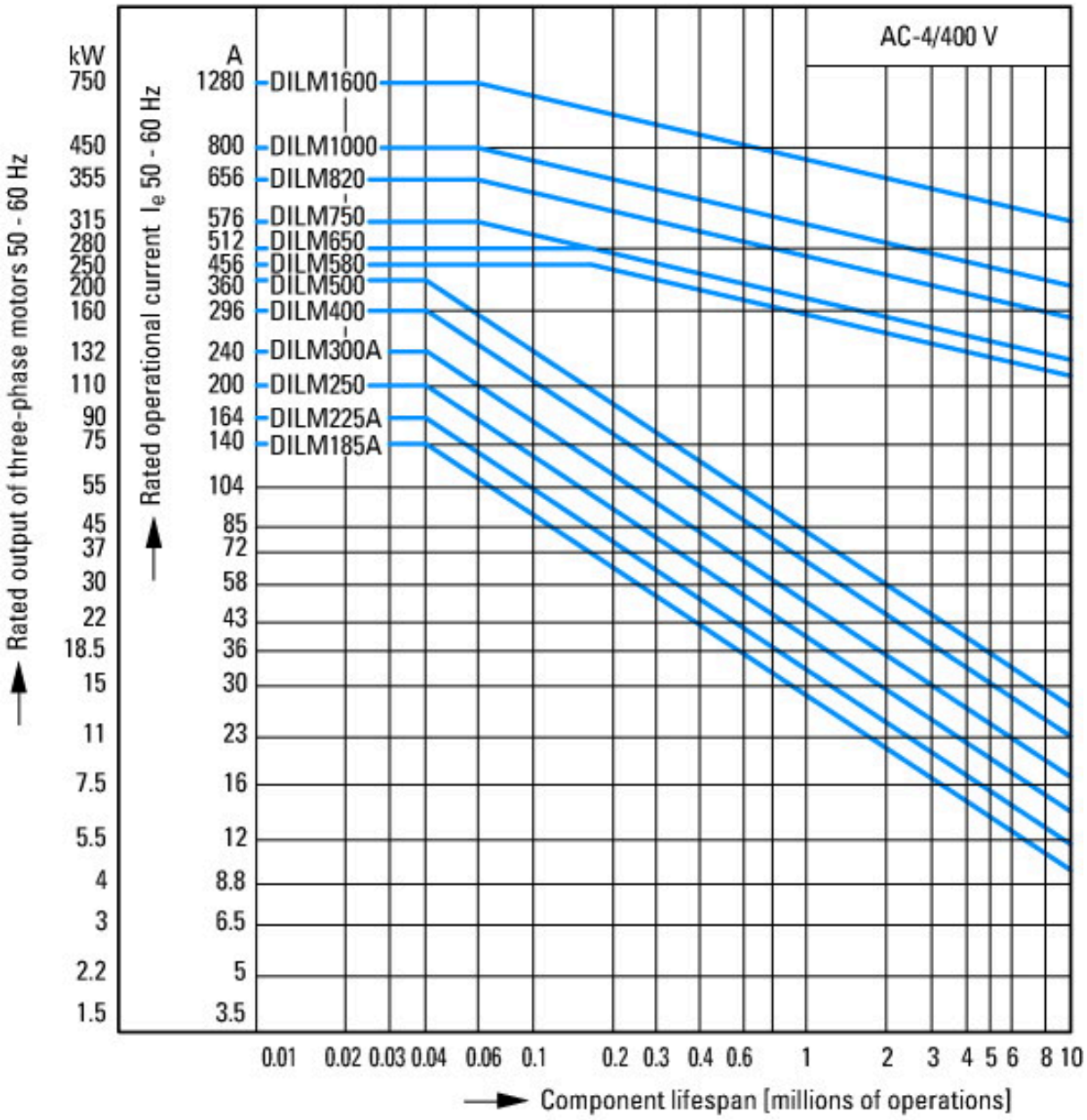

Extreme switching duty
Squirrel-cage motor
Operating characteristics
Inching, plugging, reversing
Electrical characteristics
Make: up to 6 x rated motor current
Break: up to 6 x rated motor current
Utilization category
100 % AC-4
Typical applications
Printing presses
Wire-drawing machines
Centrifuges
Special drives for manufacturing and processing machines

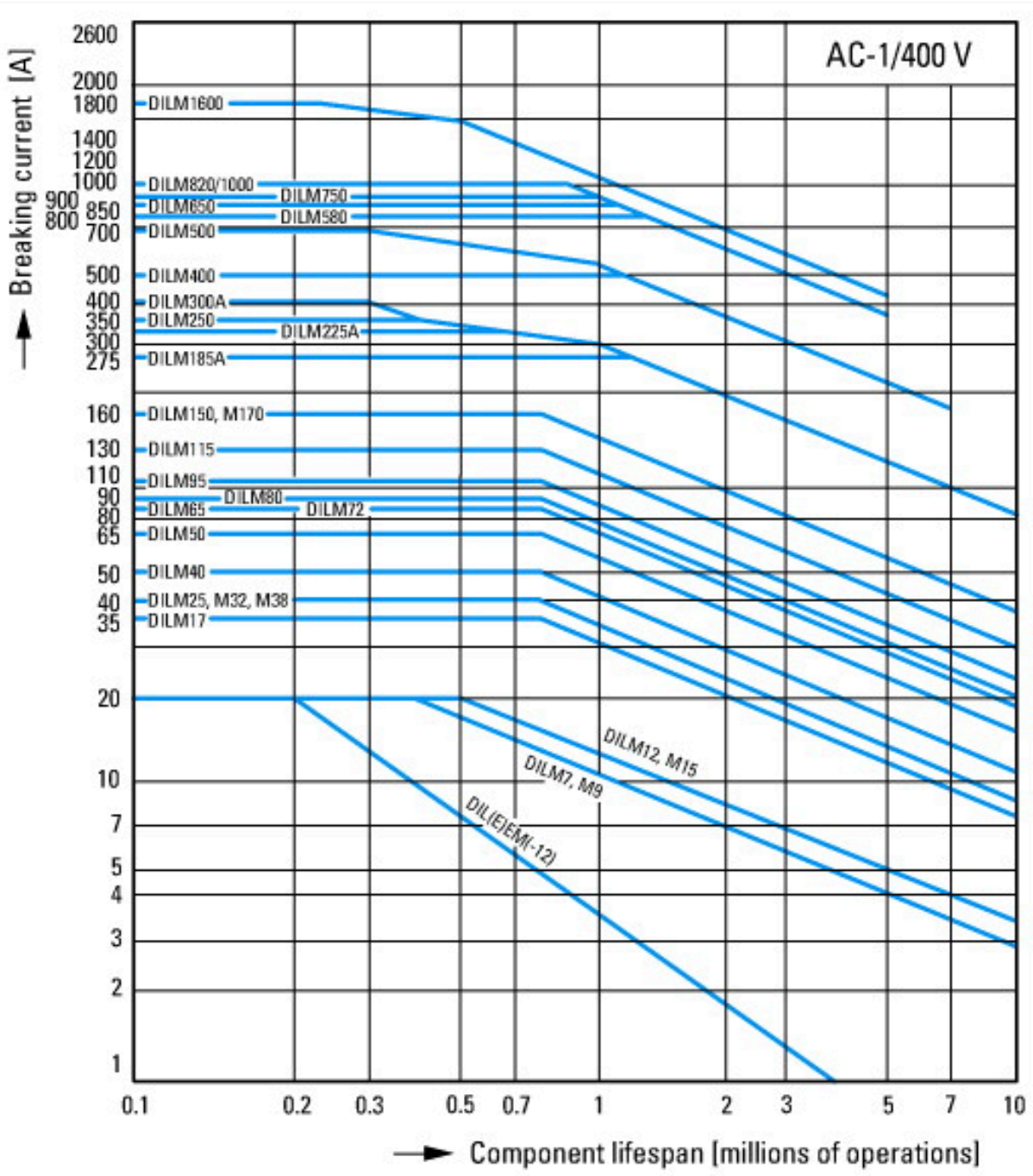

Switching conditions for 3 pole, non-motor loads
Operating characteristics
Non inductive and slightly inductive loads
Electrical characteristics
Switch on: 1 x rated operational current
Switch off: 1 x rated operational current
Utilization category
100 % AC-1
Typical examples of application
Electric heat

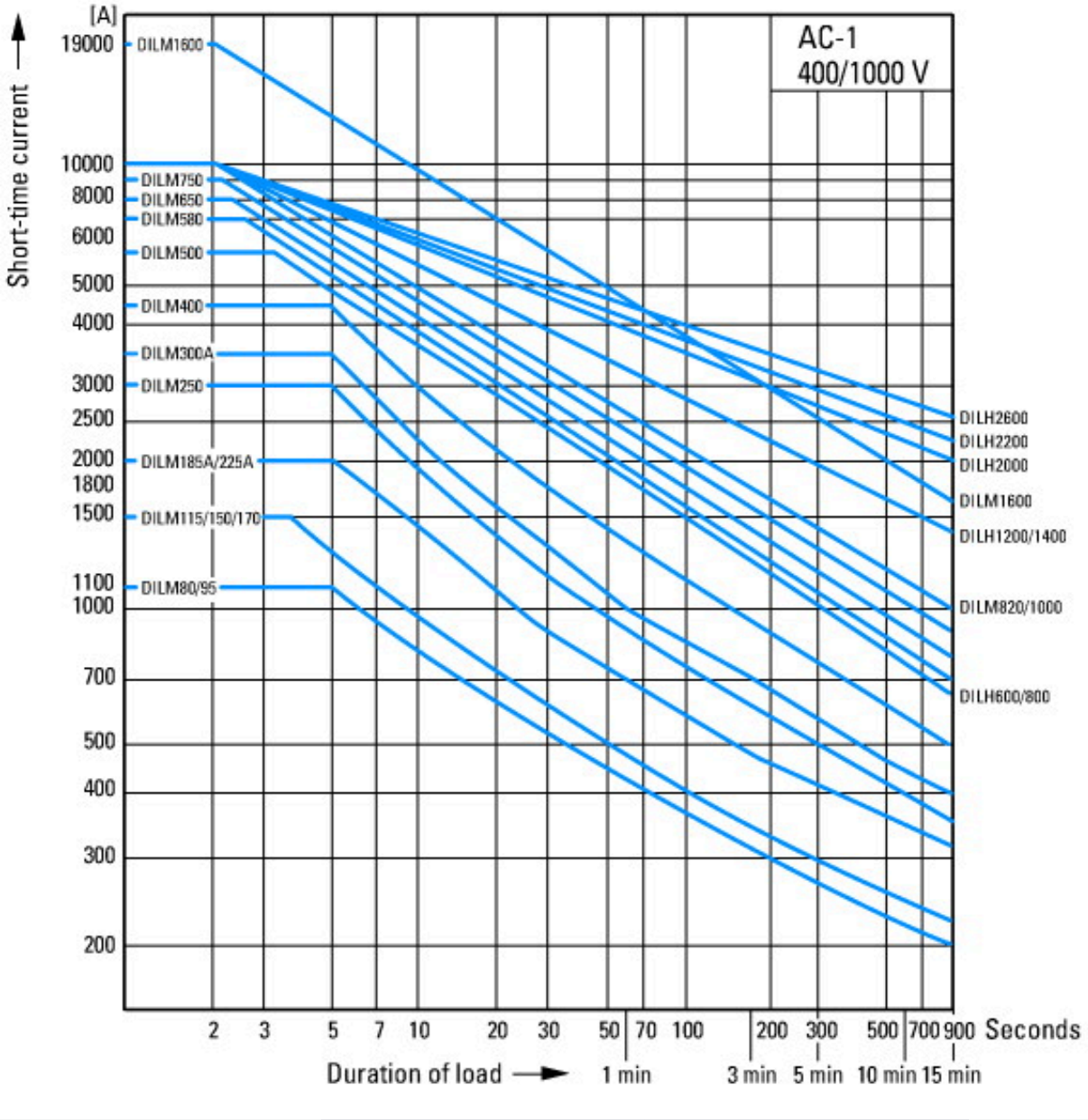

Short-time loading, 3-pole
Time interval between two loading cycles: 15 minutes

Dimensions

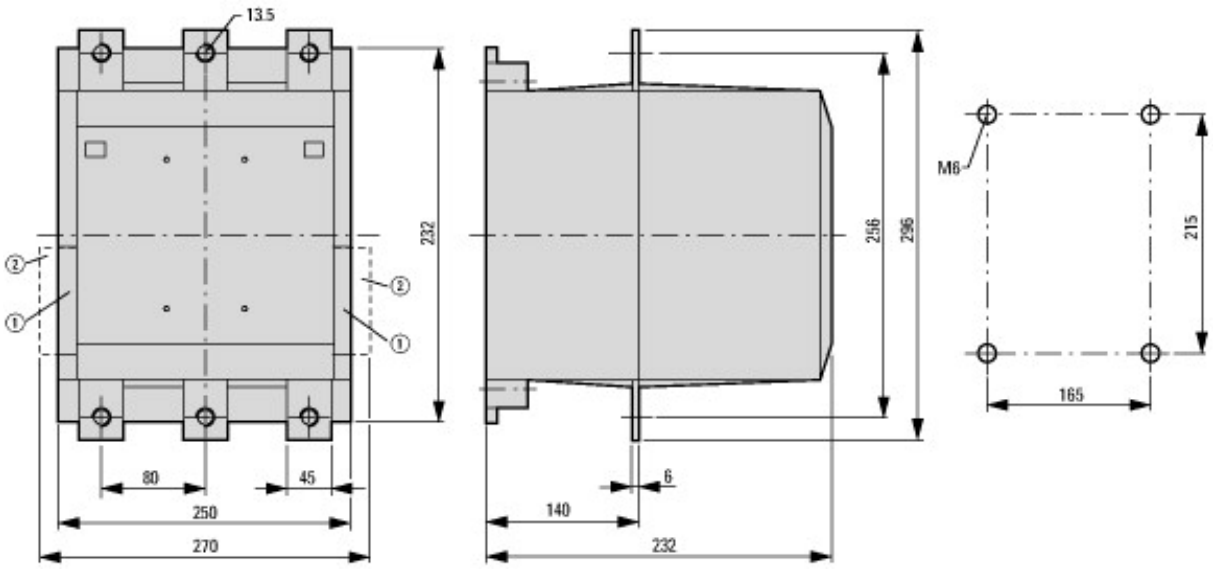

① DILM820-XHI11(V)-SI
② DILM820-XHI11-SA

Additional product information (links)

IL03407023Z (AWA2100-1697) Contactors >170 A	
IL03407023Z (AWA2100-1697) Contactors >170 A	https://es-assets.eaton.com/DOCUMENTATION/AWA_INSTRUCTIONS/IL03407023Z2021_09.pdf
Motor starters and "Special Purpose Ratings" for the North American market	http://www.eaton.eu/ecm/groups/public/@pub/@europe/@electrical/documents/content/pct_3258146.pdf
Switchgear of Power Factor Correction Systems	http://www.moeller.net/binary/ver_techpapers/ver934en.pdf
X-Start - Modern Switching Installations Efficiently Fitted and Wired Securely	http://www.moeller.net/binary/ver_techpapers/ver938en.pdf
Mirror Contacts for Highly-Reliable Information Relating to Safety-Related Control Functions	http://www.moeller.net/binary/ver_techpapers/ver944en.pdf
Effect of the Cabel Capacitance of Long Control Cables on the Actuation of Contactors	http://www.moeller.net/binary/ver_techpapers/ver949en.pdf
Switchgear for Luminaires	http://www.moeller.net/binary/ver_techpapers/ver955en.pdf
Standard Compliant and Functionally Safe Engineering Design with Mechanical Auxiliary Contacts	http://www.moeller.net/binary/ver_techpapers/ver956en.pdf
The Interaction of Contactors with PLCs	http://www.moeller.net/binary/ver_techpapers/ver957en.pdf
Busbar Component Adapters for modern Industrial control panels	http://www.moeller.net/binary/ver_techpapers/ver960en.pdf

© 07/2022 by Eaton Industries GmbH