E11273

Connecting cable with socket

ADOGR040PLS0002H

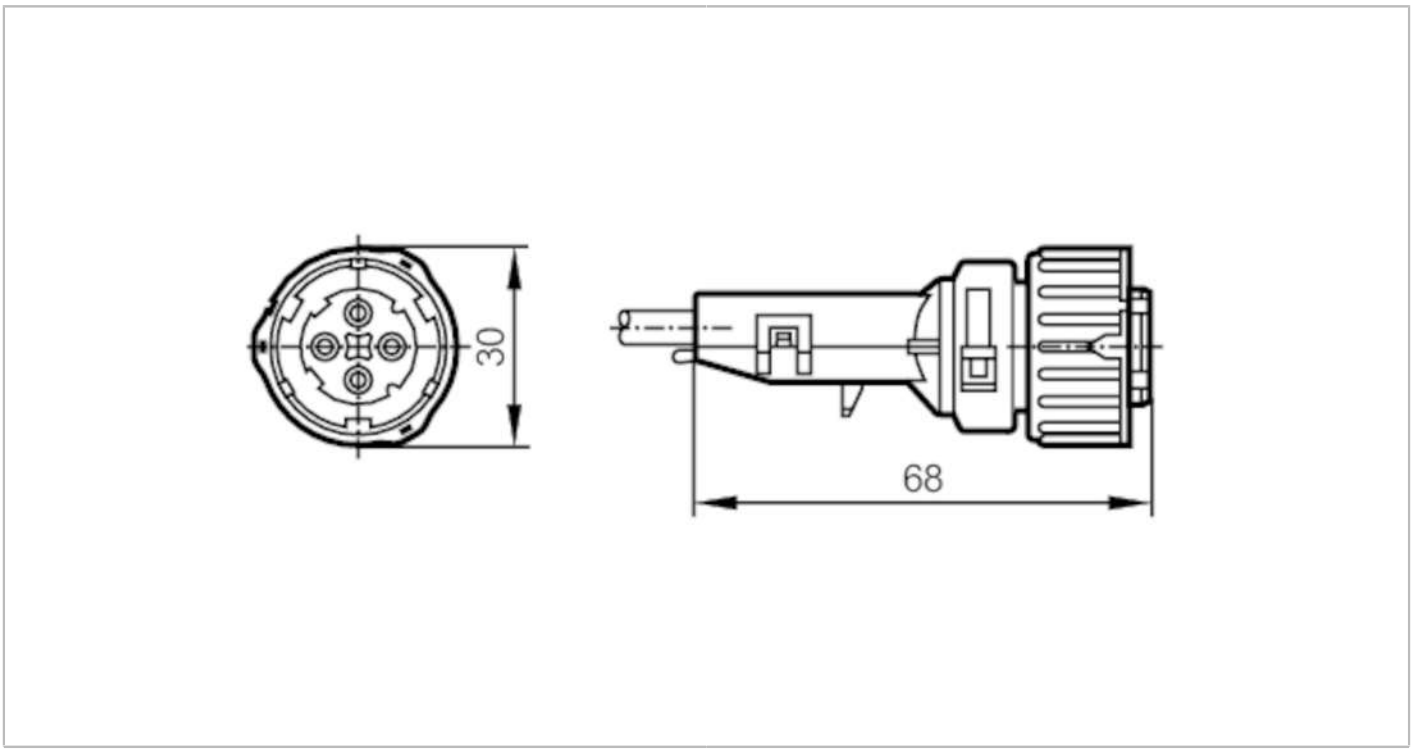

CE

Application		
Special feature		Halogen-free
Electrical data		
Operating voltage	[V]	9.6...30 DC
Operating conditions		
Ambient temperature	[°C]	-40...85
Protection		IP 67; IP 69K
Mechanical data		
Weight	[g]	106.5
Dimensions	[mm]	30 x 30 x 68
Materials		Hytrel G-4774
Moulded-body material		Hytrel G-4774
Material nut		Hytrel G-4774
Remarks		
Pack quantity		1 pcs.

E11273

Connecting cable with socket

ADOGR040PLS0002H

Electrical connection

Cable: 2 m, PUR, Halogen-free, black; 4 x 0.5 mm²

Electrical connection - socket

Connector: 1 x bayonet, straight; Moulded body: Hytrel G-4774; Locking: Hytrel G-4774

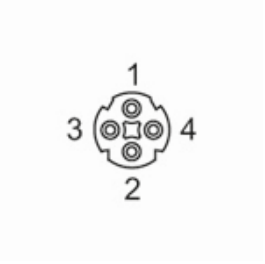

Connection

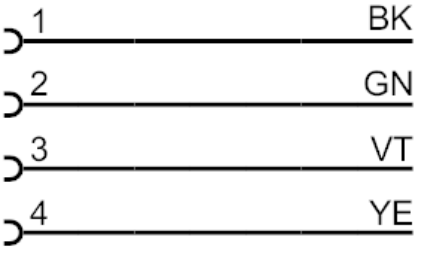

	Core colours :
BK =	black
GN =	green
VT =	lilac
YE =	yellow