

Emerg.stop/switch.off key release MS1

Part no.	**M22-PVS**
Article no.	**216879**
Catalog No.	**M22-PVSQ**

Delivery programme

Approval			
Product range			RMQ-Titan (drilling dimensions 22.5 mm)
Basic function			Emergency stop pushbutton/ emergency-stop button
Description			Individual lock mechanism MS1 Not suitable for master key systems
Construction type			Mushroom-shaped
Diameter	Ø	mm	38
Colour			
Mushroom head			Red
RAL Value			RAL 3000
			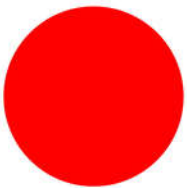
Function			Key operated
Illumination			Without illumination
Front ring			without front ring
Connection to SmartWire-DT			yes
Instructions			Release by turning with key
Information about equipment supplied			With one key

Notes

Release by turning with key

Button diameter 38 mm

With 1 key

Approvals

Product Standards	IEC/EN 60947-5; UL 508; CSA-C22.2 No. 14-05; CSA-C22.2 No. 94-91; CE marking
UL File No.	E29184
UL Category Control No.	NKCR
CSA File No.	012528
CSA Class No.	3211-03
North America Certification	UL listed, CSA certified
Degree of Protection	UL/CSA Type 3R, 4X, 12, 13

General

Standards			IEC/EN 60947 VDE 0660
Lifespan, mechanical	Operations	x 10^6	> 0.1
Operating frequency	Operations/ h		600
Actuating force		n	50
Protection type			IP67, IP69K
Climatic proofing			Damp heat, constant, to IEC 60068-2-78 Damp heat, cyclic, to IEC 60068-2-30
Ambient temperature		°C	

Open		°C	- 25 - + 70
Mounting position			As required
Mechanical shock resistance		g	50 Shock duration 11 ms Sinusoidal according to IEC 60068-2-27

Technical data ETIM 5.0

Low-voltage industrial components (EG000017) / Front element for mushroom push-button (EC001038)
Electric engineering, automation, process control engineering / Low-voltage switch technology / Command and alarm device / Front element for mushroom push-button actuators (ecl@ss8-27-37-12-12 [AKF030010])

Colour button			Red
Construction type lens			Round
Diameter cap		mm	38
Hole diameter		mm	22
Width opening		mm	22
Height meter opening		mm	6
Degree of protection (IP)			IP67
Type of button			Flat
Suitable for illumination			No
Switching function latching			Yes
Spring-return			No
With front ring			No
Material front ring			Plastic
Colour front ring			Chrome
Suitable for emergency stop			Yes
Unlocking method			Key-release

Dimensions

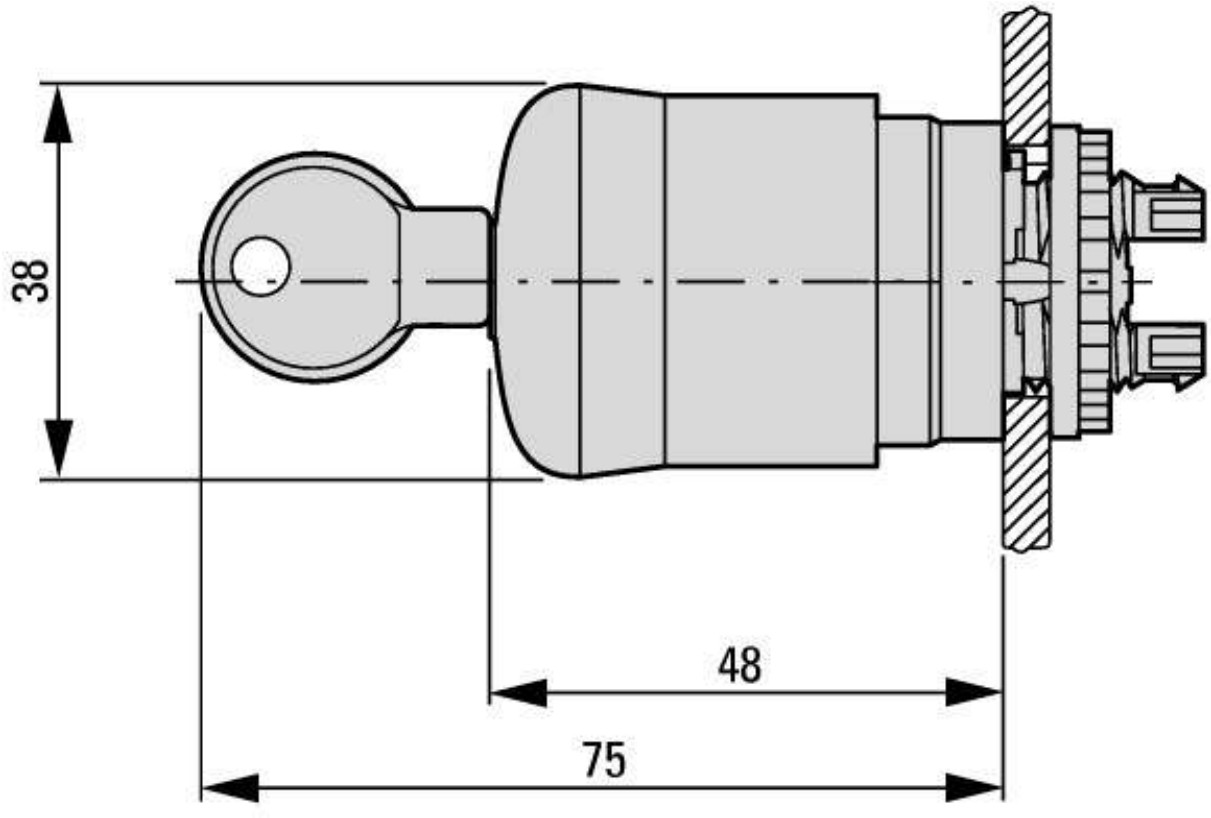

Additional product information (links)

IL04716005Z RMQ-Titan: Emergency stop buttons, Emergency stop buttons | IL04716002Z*.pdf;IL04716002Z	
IL04716005Z RMQ-Titan: Emergency stop buttons, Emergency stop buttons | IL04716002Z*.pdf;IL04716002Z	ftp://ftp.moeller.net/DOCUMENTATION/AWA_INSTRUCTIONS/IL04716005Z2012_02.pdf

© 11/2013 by Eaton Industries GmbH