Brand of NTN corporation

Technical data

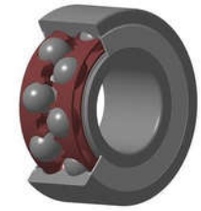

5311ZZG15

Double row angular contact ball bearings

VISUAL (S)

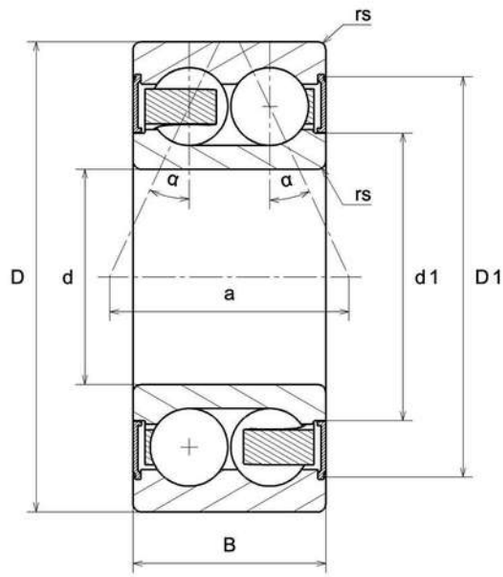

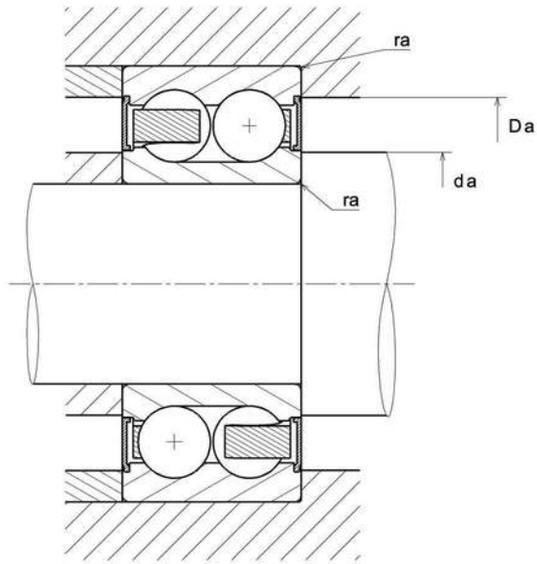

NTN Europe
1 rue des Usines · BP 2017 · 74010 Annecy Cedex · France · Tel. +33 (0)4 50 65 30 00
S.A. au capital de 322 639 919 € · RCS ANNECY B 325 821 072 · Id. Fiscale : FR 48 325 821 072
SIRET 325 821 072 00015 · Code APE 2815 Z · Code NACE 28.15

5311ZZG15
Double row angular contact ball bearings

PRODUCT DEFINITION	
Brand	SNR
d - Internal diameter	55 mm
D - External diameter	120 mm
B - Bearing/Inner ring width	49,2 mm
d1 - External diameter inner ring	75,2 mm
D1 - Inner diameter outer ring	105 mm
a - Charge load application point	61,2 mm
- Contact angle	25 °
rs - Min fillet radius	2 mm
Radial clearance class	CN
Precision class	P0
Mass	2,11 kg

PRODUCT PERFORMANCE	
C - Dynamic load	98600000 mN
C0 - Static load	78800000 mN
Cu - Fatigue limit load	4900000 mN
f0 - Coefficient	13.8
N ref - Reference thermal speed	30000 °/s
N lim - Mechanical Limit Speed	26400 °/s
Tmin - Min operating temperature	253,15 °K
Tmax - Max operating temperature	393,15 °K

BEARING FREQUENCIES	
BPFO - Over rolling frequency on outer ring (60 rpm)	3.173 Hz

BEARING FREQUENCIES	
BPFI - Over rolling frequency on inner (60 rpm)	4.827 Hz
BSF - Over rolling frequency on rolling element (60 rpm)	4.197 Hz
BRF - Rotational frequency – rolling element (60 rpm)	2.099 Hz
FTF - Rotational frequency - cage (60 rpm)	0.397 Hz

ABUTMENT	
da min - Min shoulder diameter IR	64 mm
da max - Max shoulder diameter IR	75,2 mm
Da max - Max shoulder diameter OR	111 mm
ra max - Max shaft & housing fillet radius	2 mm