Self-aligning ball bearings 1204-TVH (Series 12)

main dimensions to DIN 630

The datasheet is only an overview of dimensions and basic load ratings of the selected product. Please always observe all the guidelines in these overview pages. Further information is given on many products under the menu item "Description". You can also order comprehensive information via the Catalogue selection system (http://www.fag.de/content.fag.de/en/mediathek/library/library.jsp) or by telephone on +49 (91 32) 82 - 28 97.

d	20	mm	
D	47	mm	
B	14	mm	
D_1	37,8	mm	
d_1	29,2	mm	
$D_{a\ max}$	41,4	mm	
$d_{a\ min}$	25,6	mm	
$r_{a\ max}$	1	mm	
r_{min}	1	mm	
m	0,118	kg	Mass
C_r	10100	N	Basic dynamic load rating, radial
e	0,28		
Y_1	2,24		
Y_2	3,46		
C_{0r}	2600	N	Basic static load rating, radial
Y_0	2,34		
n_G	18100	1/min	Limiting speed
n_B	15300	1/min	Reference speed
C_{ur}	161	N	Fatigue limit load, radial

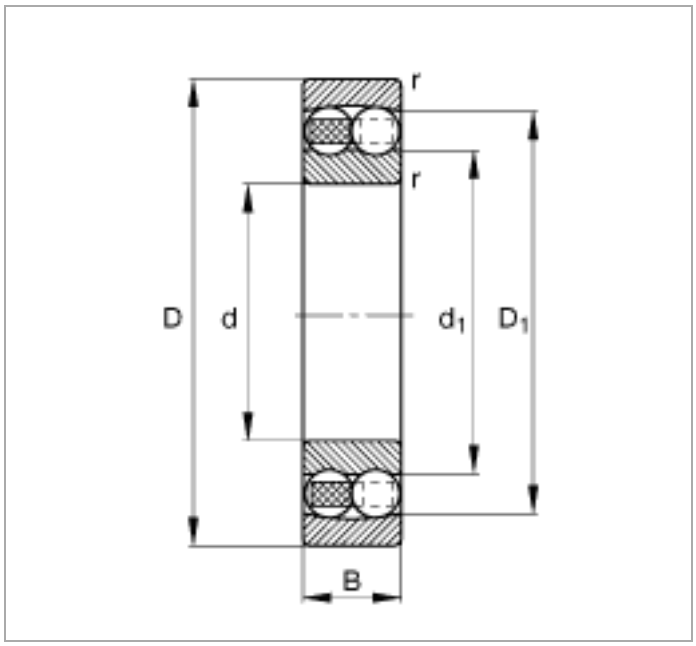
r
r
D
d
d1
D1
B

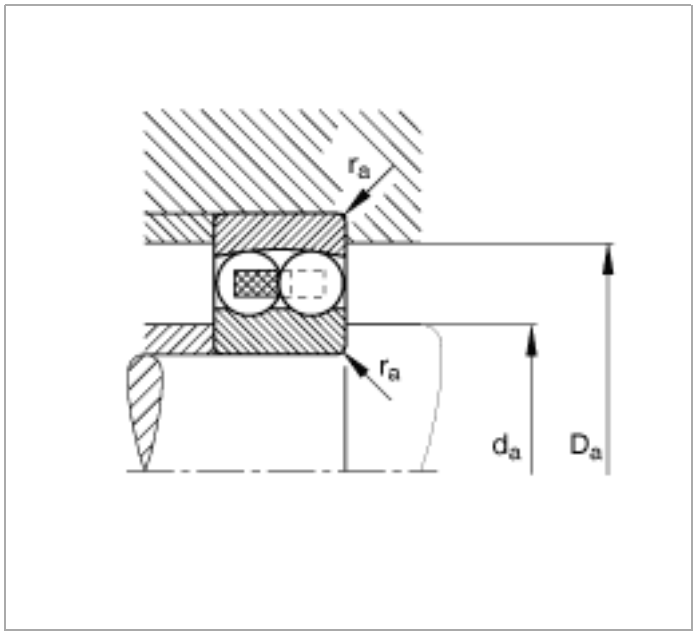
ra
ra
da
Da