Enclosure series technoPLUS

Type: TP 090

Material-No.: 290.090.000

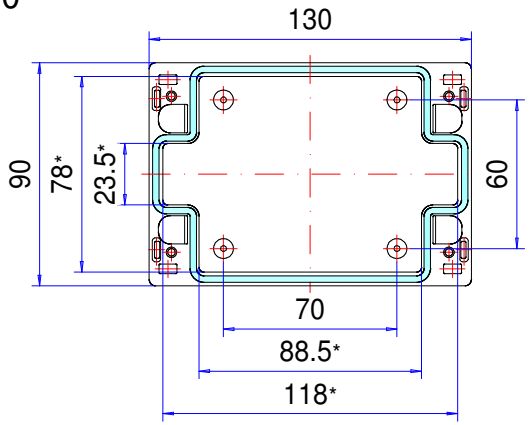

Folie/ Keypad
81.4 $^{+0}_{-0.2}$ x 92.6 $^{+0}_{-0.2}$

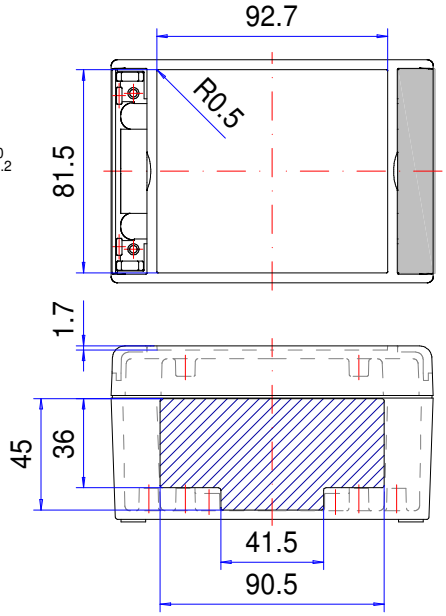

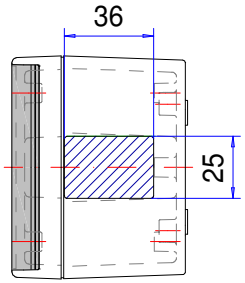

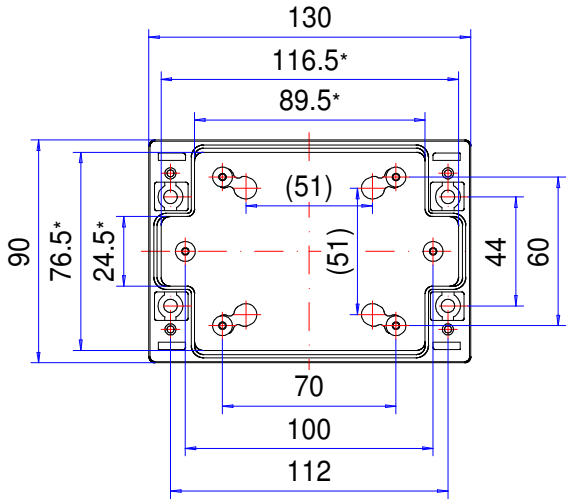

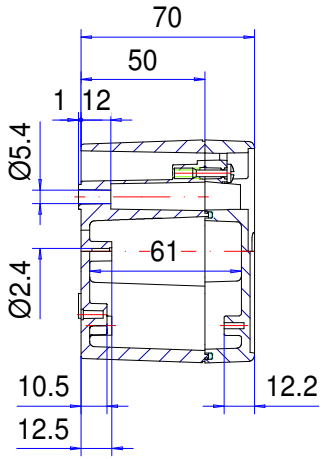

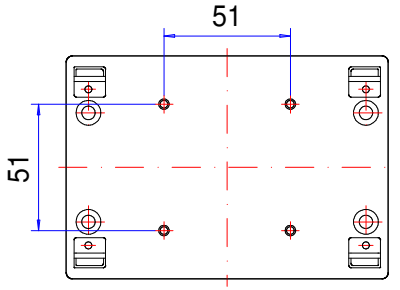

* Please note: Mould slope for casting ejection, dimensions in the amount of the bottom!

Enclosure material	LURAN S 778T UV, RAL 7035, light grey		Weight	272 g
Lid screws	4x 1.4567 (V2A), captive		Assembly screws	4x KBL Ø3x6,0, galvanized steel
Gasket	1x moulded gasket, silicone, transparent		Design covers	2x Polypropylen (PP), RAL 7016, anthracite grey
Ingress protection	IP67 EN 60529		Tolerance	DIN ISO 16901-130 (outside dimensions ±0.5mm)