# Pressure sensor, Series PE5

**R412010771**

## AVENTICS Series PE5 Pressure sensors

The AVENTICS Series PE5 is an electronic pressure sensor, which combines electronic precision and versatile functions with ideal user friendliness.




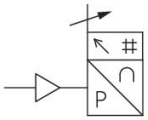


## Technical information

| | |
|---|---|
| Industry | Industrial |
| Output signal | PNP, NPN, Push-pull<br>0 - 10 V DC<br>4 ... 20 mA |
| Type | electronic |
| Operating pressure min | 0 bar |
| Operating pressure max | 6 bar |
| Protection against overpressure | 15 bar |
| Operational voltage | 17-30 V DC |
| Switching logic | NO/NC (adjustable) |
| Max. shock resistance | 30 g |
| Vibration resistance | 5 g (10 - 150 Hz) |
| Precision (% of full scale value) | ± 0,2 % |
| Hysteresis | adjustable |
| Measurement | Relative pressure |
| Display | LCD display, 4 digits<br>Color setting: green or red |
| Units displayed | bar<br>psi<br>kPa<br>MPa |

| | |
|---|---|
| | inHg |
| Compressed air connection | G 1/4 |
| Compressed air connection type | Internal thread |
| Min. medium temperature | 0 °C |
| Max. medium temperature | 60 °C |
| Medium | Compressed air (max. 40 µm) |
| Certificates | CE declaration of conformity<br>cULus<br>RoHS<br>Conforms with REACH<br>Free of substances that impair surface wetting in the coating process |
| Electrical connection type | Plug |
| Electrical connection size | M12x1 |
| Electrical connection number of poles | 4-pin |
| Min. ambient temperature | 0 °C |
| Max. ambient temperature | 60 °C |
| Max. oil content of compressed air | 40 mg/m³ |
| Switching time | < 5 ms |
| Resetting point | adjustable 0 ... 100% |
| Switching point | adjustable 0 ... 100% |
| Quiescent current consumption | <40 mA |
| Delayed hysteresis | adjustable |
| Analog output linearity | <± 0.5% of the final value |
| Maximum load (analog current output) | 600 Ω |
| Protection class | IP65<br>IP67 with connections assembled |
| Short circuit resistance | Max. 600 ohms (current output)<br>Min. 3K ohms (voltage output) |
| Mounting types | Directly on hat rail and wall mounting<br>For panel installation using mounting kit<br>via double nipple |
| Weight | 0.04 kg |

## Material

| | |
|---|---|
| Housing material | Polycarbonate |
| Seal material | Acrylonitrile butadiene rubber |
| Material electrical connection | Aluminum |
| Part No. | R412010771 |

## Technical information

Alternative pressure connection (G1/4) on the rear side (closed with plug)

Display color selectable, red or green

The pressure dew point must be at least 15 °C less than ambient and medium temperature and may not exceed 3 °C.

The oil content of compressed air must remain constant during the life cycle.

Use only the approved oils from AVENTICS. Further information can be found in the “Technical information” document (available in https://www.emerson.com/en-us/support).

## Internal thread

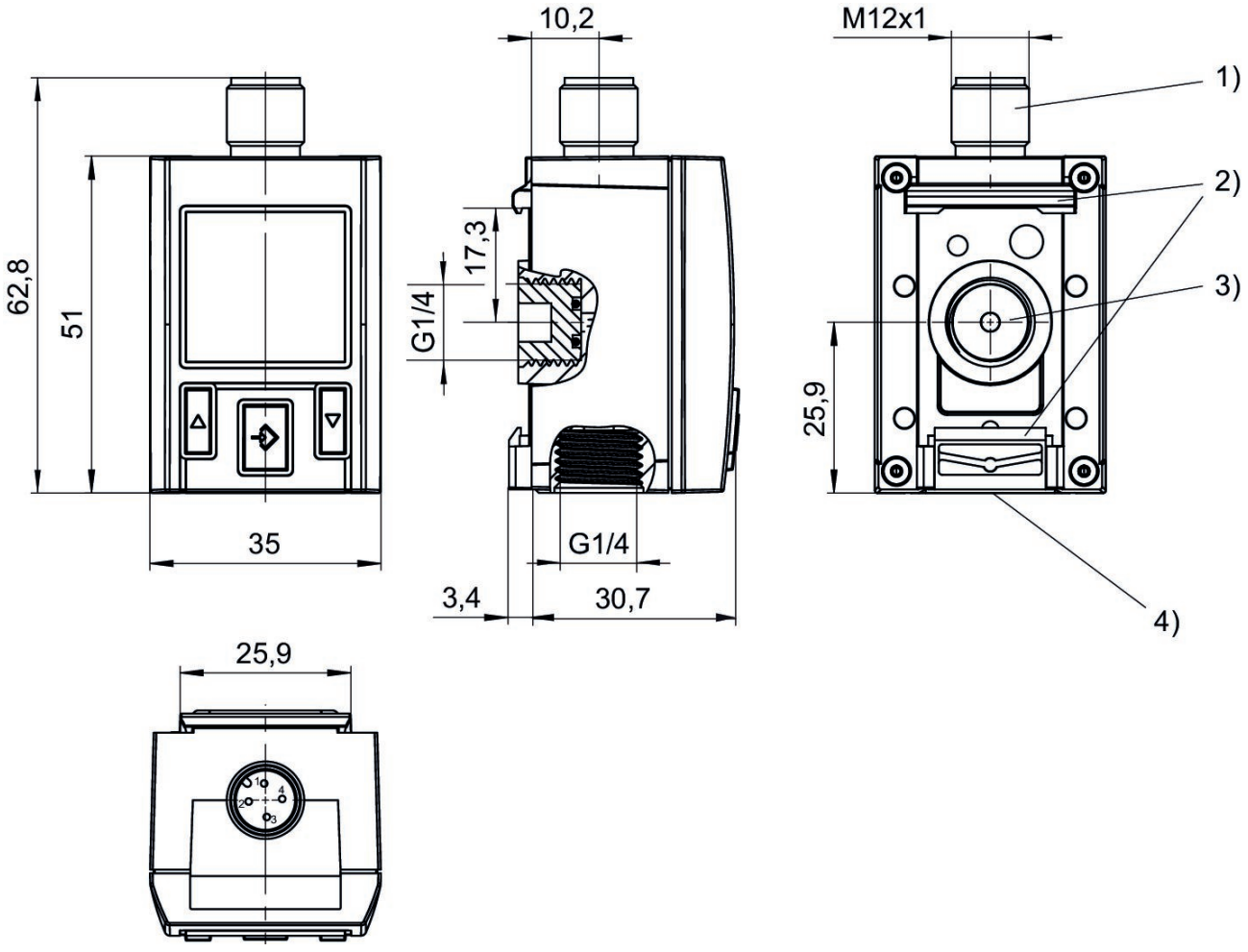


1) M12x1 electrical connection
2) Mounting for hat rail and wall mounting
3) Alternative pressure connection (G1/4) closed with plug
4) Pressure connection G1/4

## Electr. connection for leak test

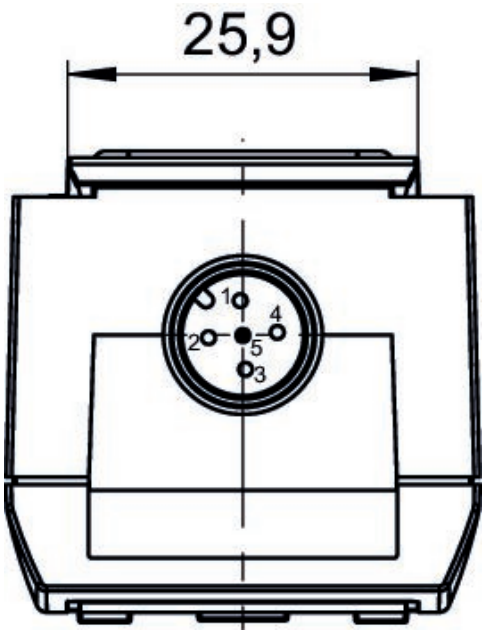


## Display and operation area

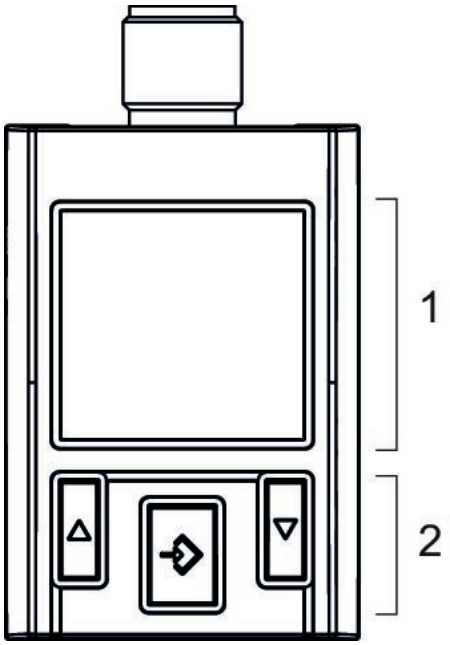


1) LCD display
2) Control panel with 3 buttons

## Operating mode
Push-pull

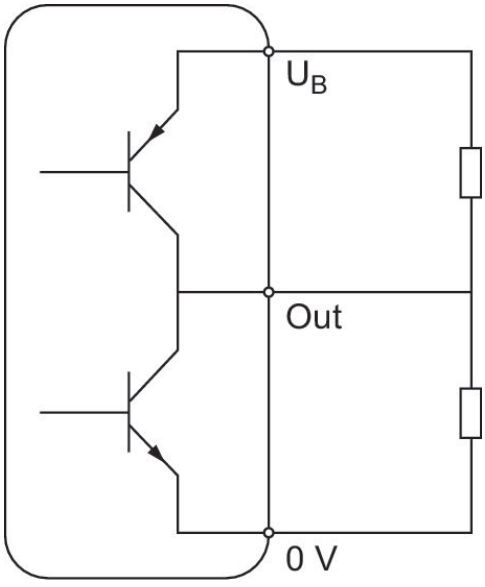


## Operating mode
NPN

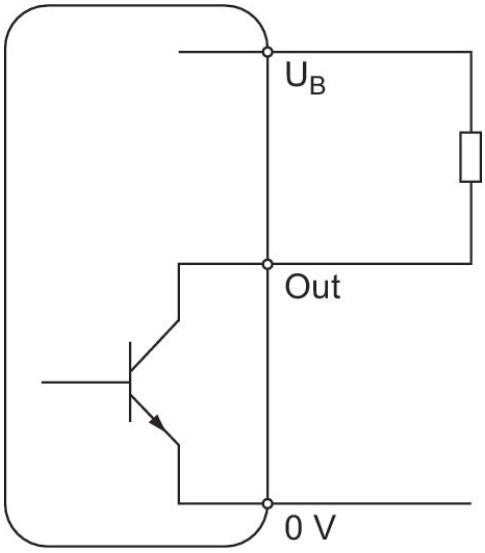

## Operating mode
PNP

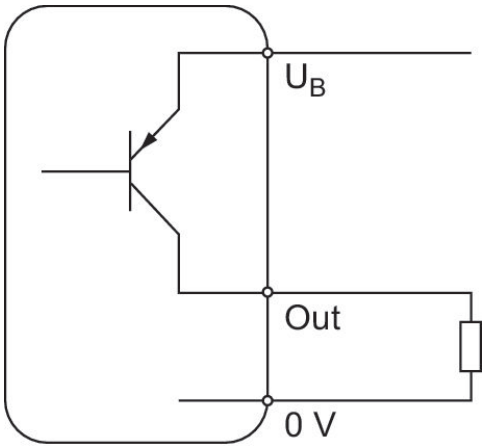


## Hysteresis function: switching and resetting behavior dependent on pressure p and time t
In case of underpressure

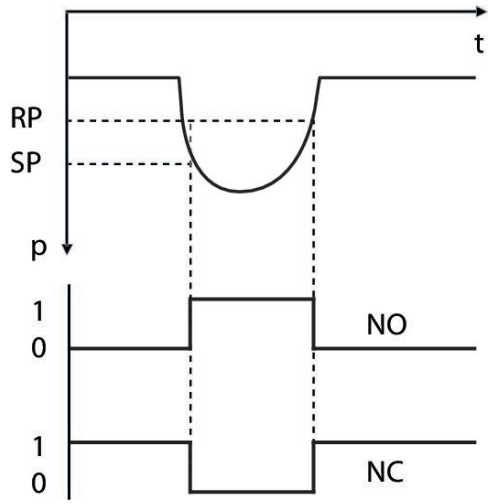


## Hysteresis function: switching and resetting behavior dependent on pressure p and time t
In case of overpressure

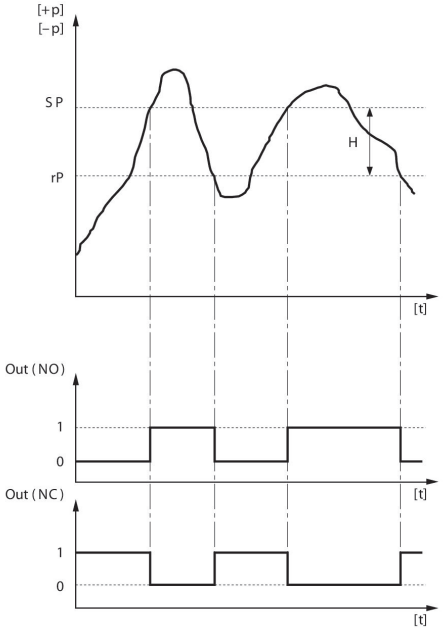


H: Hysteresis
SP = switching point RP = resetting point
Out (NC): switch output, break contact Out (NO): switch output, make contact

## Delayed hysteresis function: switching and resetting behavior depending on pressure p and time t

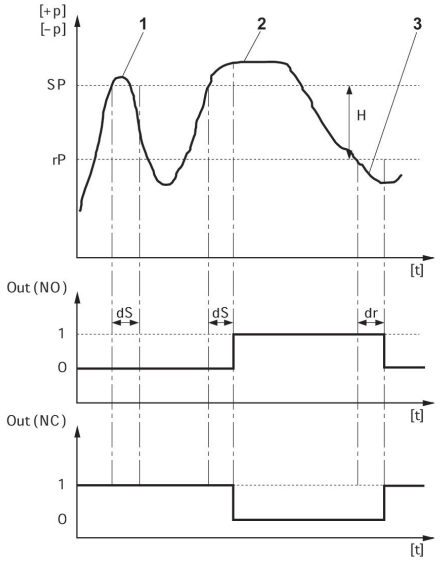


H: Hysteresis
SP = switching point RP = resetting point
Out (NC): switch output, break contact Out (NO): switch output, make contact
dS: switching delay dR = reset delay
1) period of pressure over the switching point < dS: pressure sensor does not switch 2) Period of pressure over the switching point > dS: pressure sensor switches 3) Period of pressure under the resetting point > dR: pressure sensor switches

## Window function: switching and resetting behavior depending on pressure p and time t

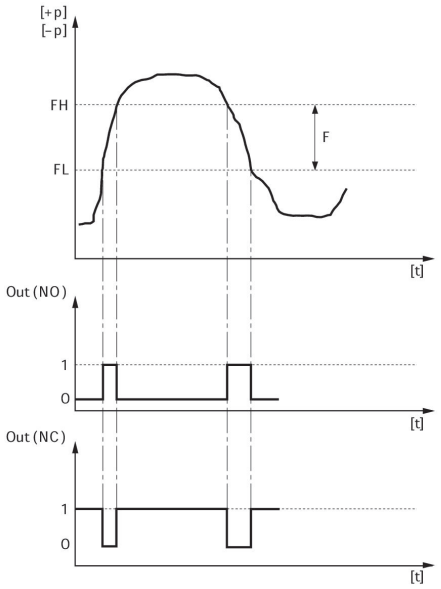


FH: pressure band, upper value
FL: pressure band, lower value
Out (NC): switch output, break contact Out (NO): switch output, make contact

## Block diagram
### 1x PNP and 1x analog

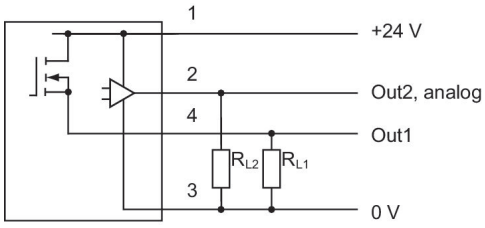


RL = storable postion

## Block diagram
### 1x NPN and 1x analog

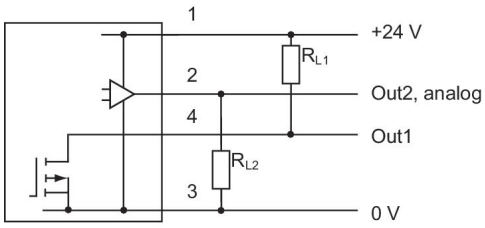


RL = storable postion

## Pin assignments
### M12x1
### 4-pin

