E43908

Mounting adapter for flow sensors

ADAPTION SHEET WELDED M18

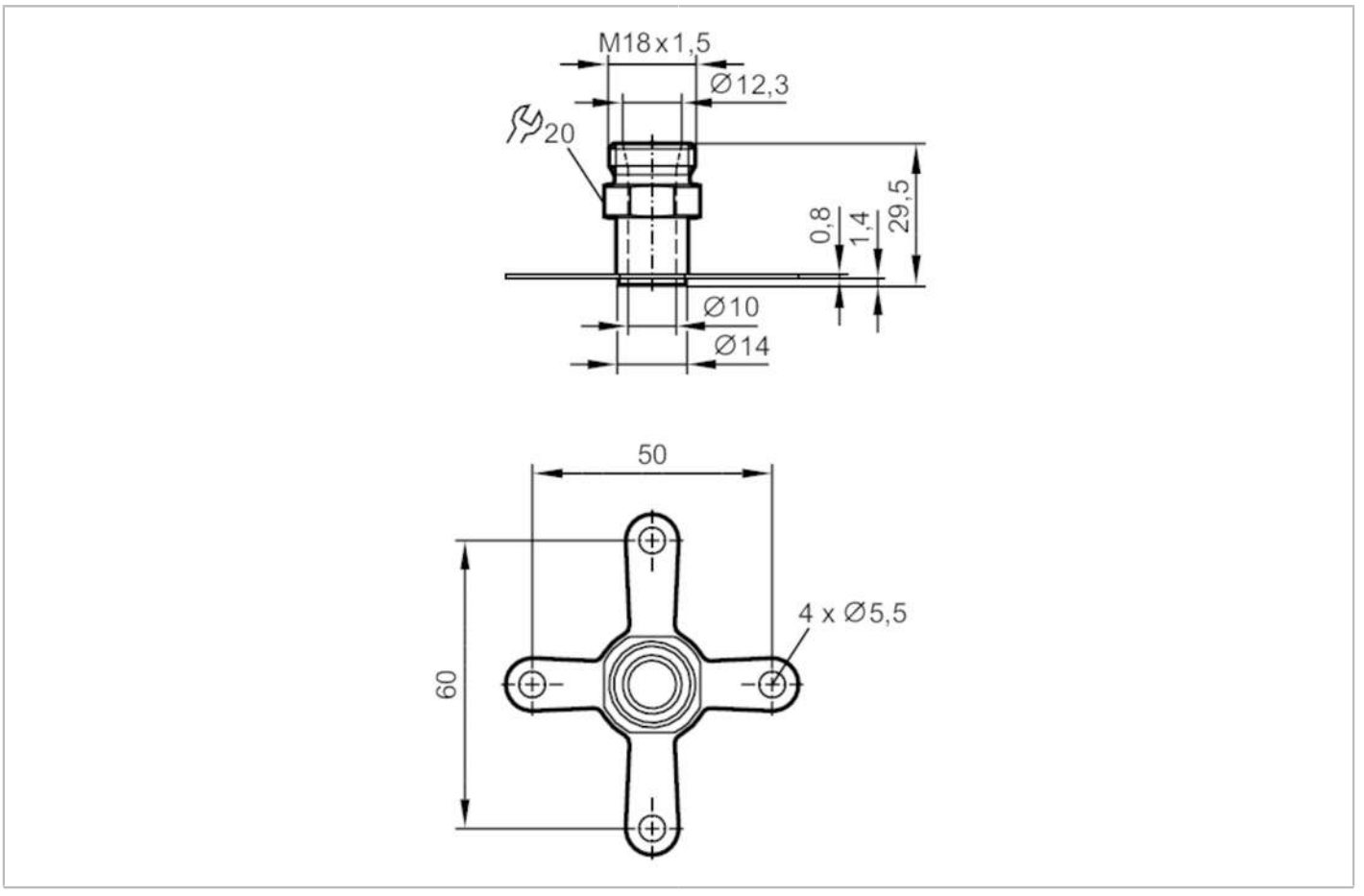

Application		
Media		liquids and gases of the fluid group 2 according to the Pressure Equipment Directive (PED)
Tests / approvals		
Pressure Equipment Directive EAC		The adapter is intended for use in devices, machines and installations that do not fall under the categories of the technical rule TR CU 032/2013.
Mechanical data		
Weight	[g]	97.5
Materials		stainless steel (1.4404 / 316L); stainless steel (1.4435 / 316L)
Sensor connection		M18 x 1,5
Remarks		
Pack quantity		1 pcs.