Product datasheet

Specifications



Discontinued

inductive sensor XS2 M30 - L70mm - PPS - Sn22mm - 12..48VDC - M12

XS230AAPAM12

Discontinued on: 01 November 2020

XS230AAPAM12 has not been replaced. Please contact your customer care centre for more information.

Main

Range of product	Telemecanique Inductive proximity sensors XS
Series name	Application
Sensor type	Inductive proximity sensor
Device application	Food and beverage
Market segment	Pharmaceutical
Sensor name	XS2
Sensor design	Cylindrical M30
Size	70 mm
Body type	Fixed
Detector flush mounting acceptance	Non flush mountable
Material	Plastic
Type of output signal	Discrete
Wiring technique	3-wire
[Sn] nominal sensing distance	22 mm
Discrete output function	1 NO
Output circuit type	DC
Discrete output type	PNP
Electrical connection	Male connector M12, 4 pins
[Us] rated supply voltage	12...48 V DC with reverse polarity protection
Switching capacity in mA	<= 200 mA with overload and short-circuit protection
IP degree of protection	IP67 conforming to IEC 60529 IP69K conforming to DIN 40050

Complementary

Thread type	M30 x 1.5
Detection face	Frontal
Front material	PPS
Enclosure material	PPS

Disclaimer: This documentation is not intended as a substitute for and is not to be used for determining suitability or reliability of these products for specific user applications

Sensing range	> 15...40 mm
Operating zone	0…17.6 mm
Differential travel	1...15% of Sr
Status LED	Output state: 1 LED (yellow)
Supply voltage limits	10…58 V DC
Switching frequency	<= 500 Hz
Maximum voltage drop	<2 V (closed)
Current consumption	<= 10 mA no-load
Maximum delay first up	10 ms
Maximum delay response	0.6 ms
Maximum delay recovery	1.4 ms
Marking	CE
Threaded length	52 mm
Length	70 mm
Net weight	0.08 kg

Environment

Product certifications	CSA CCC UL
Ambient air temperature for operation	-25…85 °C
Ambient air temperature for storage	-40…85 °C
Vibration resistance	25 gn amplitude = +/- 2 mm (f = 10…55 Hz) conforming to IEC 60068-2-6
Shock resistance	50 gn for 11 ms conforming to IEC 60068-2-27

Packing Units

Unit Type of Package 1	PCE
Number of Units in Package 1	1
Package 1 Weight	86.0 g
Package 1 Height	4.5 cm
Package 1 width	6.5 cm
Package 1 Length	9.5 cm
Unit Type of Package 2	BAG
Number of Units in Package 2	1
Package 2 Weight	86.0 g
Package 2 Height	3 cm
Package 2 width	20 cm
Package 2 Length	15 cm
Unit Type of Package 3	S01
Number of Units in Package 3	11
Package 3 Weight	1.171 kg
Package 3 Height	15 cm
Package 3 width	15 cm

Package 3 Length	40 cm

Offer Sustainability

Sustainable offer status	Green Premium product
REACh Regulation	REACh Declaration
EU RoHS Directive	Pro-active compliance (Product out of EU RoHS legal scope) EU RoHS Declaration
Mercury free	Yes
RoHS exemption information	Yes
Environmental Disclosure	Product Environmental Profile
Circularity Profile	End of Life Information

Contractual warranty

Warranty	18 months

Product datasheet XS230AAPAM12

Dimensions Drawings

Dimensions

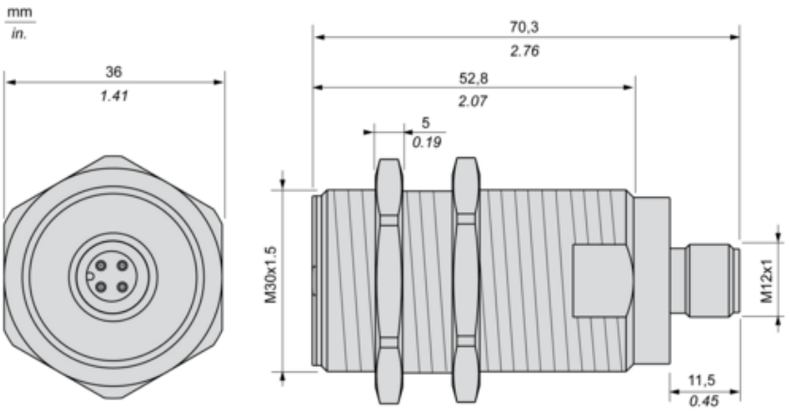

Product datasheet XS230AAPAM12

Mounting and Clearance

Minimum Mounting Distances in mm

Side by side

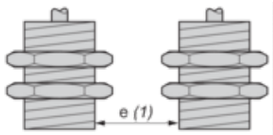

e (1) ≥ 120 mm/4.72 in.

Face to face

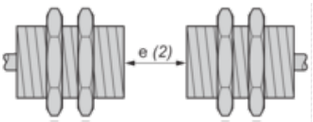

e (2) ≥ 264 mm/10.39 in.

Facing a metal object

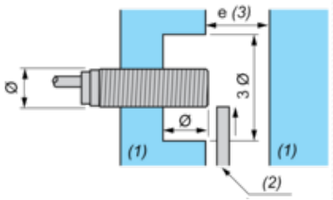

e (3) ≥ 66 mm/2.60 in.

(4) Metal

(5) Object to be detected

Product datasheet XS230AAPAM12

Connections and Schema

Wiring Schemes

M12 connector



PNP

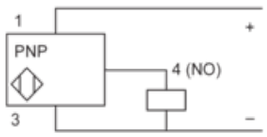

1 : (+)

2 : Not connected

3 : (-)

4 : NO Output