Timers, round design | High protection rating (AC+DC) | HR 76



The hour meter HR 76 feature a very high shock resistance.

These panel-mount counters for round panel cut-outs can be used in many different fields of application. These non-resettable counters are very robust and extremely tamper-proof.

Characteristics

- 6-digit hour meter
- Low cost
- High shock resistance
- Low energy consumption
- Magnified large figures
- Protection IP65
- Data retention in case of power failure
- Long service life

Benefits

- 50/60 Hz in the same device
- Small mounting depth
- Waterproof on the front and on the rear

Applications

Operating hours measurement with construction and agricultural machinery, compressors, power units

Type series

Description	*Mounting*	*Type*
Timer, round	screw mounting front side	**HR 76.1**
Timer, round	clip mounting	**HR 76.2**

Accessories	Dimensions in mm [inch]		Order-No.
Counter mounting fixture	For round counters with cut-out ø 53 [2.09“]	schwarz	**N510199**

Suitable gaskets as well as further accessories can be found in the accessories section or in the accessories area of our website at: www.kuebler.com/accessories.

Technical data

Electrical connection		flat pin 0.8 x 6.3 mm [0.031 x 0.25“]
Power consumption	AC	max. 0.4 VA
	12 V DC	max. 0.08 W
	48 V DC	max. 0.7 W
Rated voltages	AC (50 or 60 Hz)	115/230 V AC, ± 10 %, 50/60 Hz
	DC	10 ... 80 V DC
On time		100 %
Number of digits		6: 99999.9 h
Count mode		adding
Height of figures		3.5 mm [0.14“] heigh
Colour of figures		white on black
Reset		no reset

Operating temperature		-30°C ... +65°C [-22°F ... +185°F] (non-condensing)
Storage temperature		-40°C ... +85°C [-40°F ... +149°F]
Mounting position		any
Protection		IP65 (except the connections)
Housing		plastic PC (Polycarbonate)
Accuracy		< 0.02% over the full range
Weight	HR 76.1	56 g [1.98 oz]
	HR 76.2	54 g [1.91 oz]
EMC	Emitted interference	EN 55011 class B
	Immunity to interference	EN 61000-6-2
Device safety	Designed to	EN 61010 part 1
	Protection class	2
	Application area	Pollution level 2
UL approval		E128604

© Fritz Kübler GmbH, subject to errors and changes. 04/2014

Timers, round design | High protection rating (AC+DC) | HR 76

Timer, round
screw mounting front side
Type HR 76.1



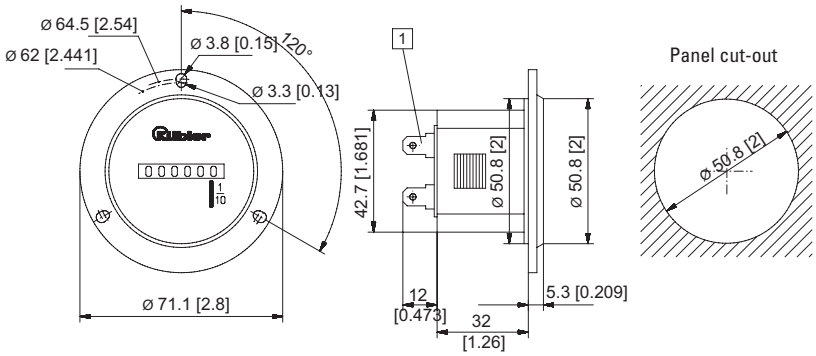

1 Electrical connection: flat pin 0.8 x 6.3 [0.031 x 0.25]

Type	Display	Voltage	Art.-No. 10 ... 80 V DC	115 V	230 V	
HR 76.1	6 digits	AC (50/60 Hz)		**0.135.100.301** 1)	**0.135.100.302** 1)	Gasket for front bezel N511150
		DC	**0.135.100.373** 1)			not included in delivery

Timer, round
clip mounting
Type HR 76.2



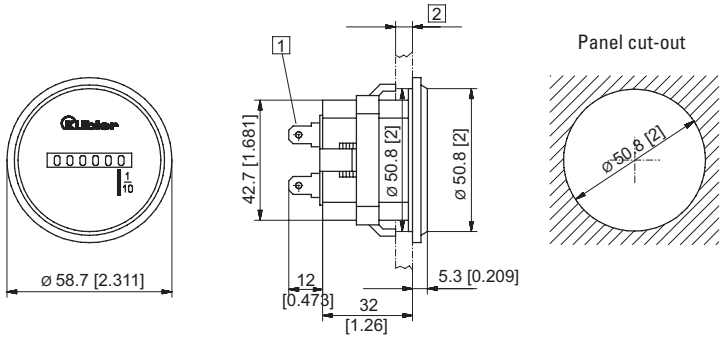

For mounting the counter onto a flat plate, see accessories chapter Art.-No.: N510199

1 Electrical connection: flat pin 0.8 x 6.3 [0.031 x 0.25] 2 max. 9 [035]

Type	Display	Voltage	Art.-No. 10 ... 80 V DC	115 V	230 V	
HR 76.2	6 digits	AC (50/60 Hz)		**0.135.200.301** 1)	**0.135.200.302** 1)	Gasket integrated in counter
		DC	**0.135.200.373** 1)			

Dimensions in mm [inch]

1) Stock types

© Fritz Kübler GmbH, subject to errors and changes. 04/2014